OFFICE OF THE ASSISTANT TO THE SECRETARY OF DEFENSE
1400 DEFENSE PENTAGON
WASHINGTON, D.C. 20301-1400

PUBLIC AFFAIRS

Ref: 94-F-2380

Mr. Jeffrey Richelson

07 FEB 1995

Dear Mr. Richelson:

This responds to your November 2, 1994, Freedom of Information Act (FOIA) request pertaining to the Operation Desert Shield/Desert Storm Intelligence Dissemination Study - Final Report.

Your request was processed by Office of the Assistant Secretary of Defense for Command, Control, Communications, and Intelligence (C3I), which has provided the enclosed document as responsive to your request. While reproducing the documents, we inadvertently took out the secret or confidential paragraph markings.

Mr. William K. O'Donnell, an Initial Denial Authority, C3I, has determined that the bracketed portions of the enclosed document contain information which is exempt from release pursuant to 5 USC 552, (b)(1); which applies to material which is currently and properly classified in accordance with Executive Order 12356, Section 1.3(a)(1), concerning military plans, weapons, or operations, and Section 1.3(a)(4), concerning intelligence activities or intelligence sources and methods.

You have the right to appeal the decision to deny this information. Any such appeal should offer justification to support reversal of the initial decision and should be forwarded within 60 calendar days of the date of this letter, to:

OATSD(PA)
DFOISR
Room 2C757
1400 Defense Pentagon
Washington, DC 20301-1400

Sincerely,

A. H. Passarella
Director
Freedom of Information
and Security Review

#728

SECRET

OFFICE OF THE ASSISTANT SECRETARY OF DEFENSE (Command, Control, Communication and Intelligence)

Intelligence Program Support Group

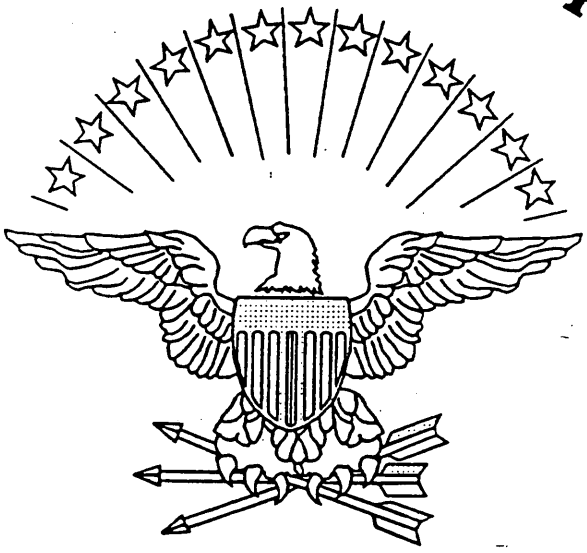

OPERATION DESERT SHIELD/DESERT STORM INTELLIGENCE DISSEMINATION STUDY

FINAL REPORT

Classified By: Multiple Sources
Declassify On: OADR

IPSG-2600-6387-92

#728

231

SECRET

INTELLIGENCE PROGRAM SUPPORT GROUP

Product Evaluation and Customer Support Directorate

OPERATION DESERT SHIELD/STORM
INTELLIGENCE DISSEMINATION STUDY

Table of Contents

Section	1	Executive Summary
	2	Background
	3	Project Definition and Approach
	4	Project Findings and Recommendations
Appendix	A	Generic Dissemination Models
	B	CENTCOM Models
	C	VII Corps Model
	D	DIA/Target Material Management Model
	E	SOCCENT Model
	F	DIA Foreign Liaison Model
	G	DIA Model
	H	ITAC Models
	I	CARRIER GP 8 Model
	J	1MEF Model
	K	DMA Model
	L	CENTAF Models
	M	XVIII Airborne Corps Model
Overview	-	Operations Desert Shield and Desert Storm

EXECUTIVE SUMMARY

(U) Dissemination of intelligence was one of the most difficult aspects of intelligence support to Operation Desert Shield/Storm. While the problem of dissemination was cited in almost every lessons learned report, detailed information on dissemination shortfalls was not documented. The Product Evaluation and Customer Support staff of the Intelligence Program Support Group (IPSG), supported by the Defense Intelligence Agency (DIA), Defense Mapping Agency (DMA), the Services and US Central Command (USCENTCOM), undertook this study effort to further define these shortfalls and to develop recommendations to improve dissemination in future military operations.

(U) In order to accomplish the study in a three month period, we focused on dissemination activities at the following units: US Central Command, US Central Air Force (CENTAF), VII Corps, XVIII Airborne Corps, Special Operations Command, Central Command (SOCCENT), 1st Marine Expeditionary Force, and Carrier Group Eight. Dissemination activities at the Defense Intelligence Agency, Defense Mapping Agency, and Army Intelligence Threat Analysis Center were also examined.

(U) The Director of Defense Information provided contractor support to the study effort so that IDEF (ICAM Definition Language) activity modeling could be used to elicit detailed information from dissemination managers. This technique allowed us to focus on dissemination in a structured way within a limited time constraint. The resulting models, contained in the appendices, can be used to develop joint doctrine, to isolate resource shortfalls and as a basis for further research.

[redacted]

(U) It is not the intent of this study to fault the intelligence support to Operation Desert Shield/Storm, but rather, to point out dissemination shortfalls which could have an impact on future deployments. Many initiatives to improve dissemination are presently underway within the Defense agencies, the Services and the Unified Commands. As Defense moves in an uncertain era where forward basing of assets is more difficult and the resource base is shrinking, these initiatives will become critical in ensuring adequate intelligence support during contingencies.

(U) The findings of the report focus on management and resource issues. There is a distinct lack of wartime information management doctrine that defines responsibilities for dissemination management at each echelon. The models in the appendices to the study show a great similarity in the activities performed by dissemination managers at each echelon. This indicates joint doctrine is achievable.

(U) The elements we examined were under-resourced for their dissemination missions at the on-set of the operation. Transportation assets, personnel, communications availability were constant constraints. These resource requirements need to be identified and planned for against a range of possible military operations.

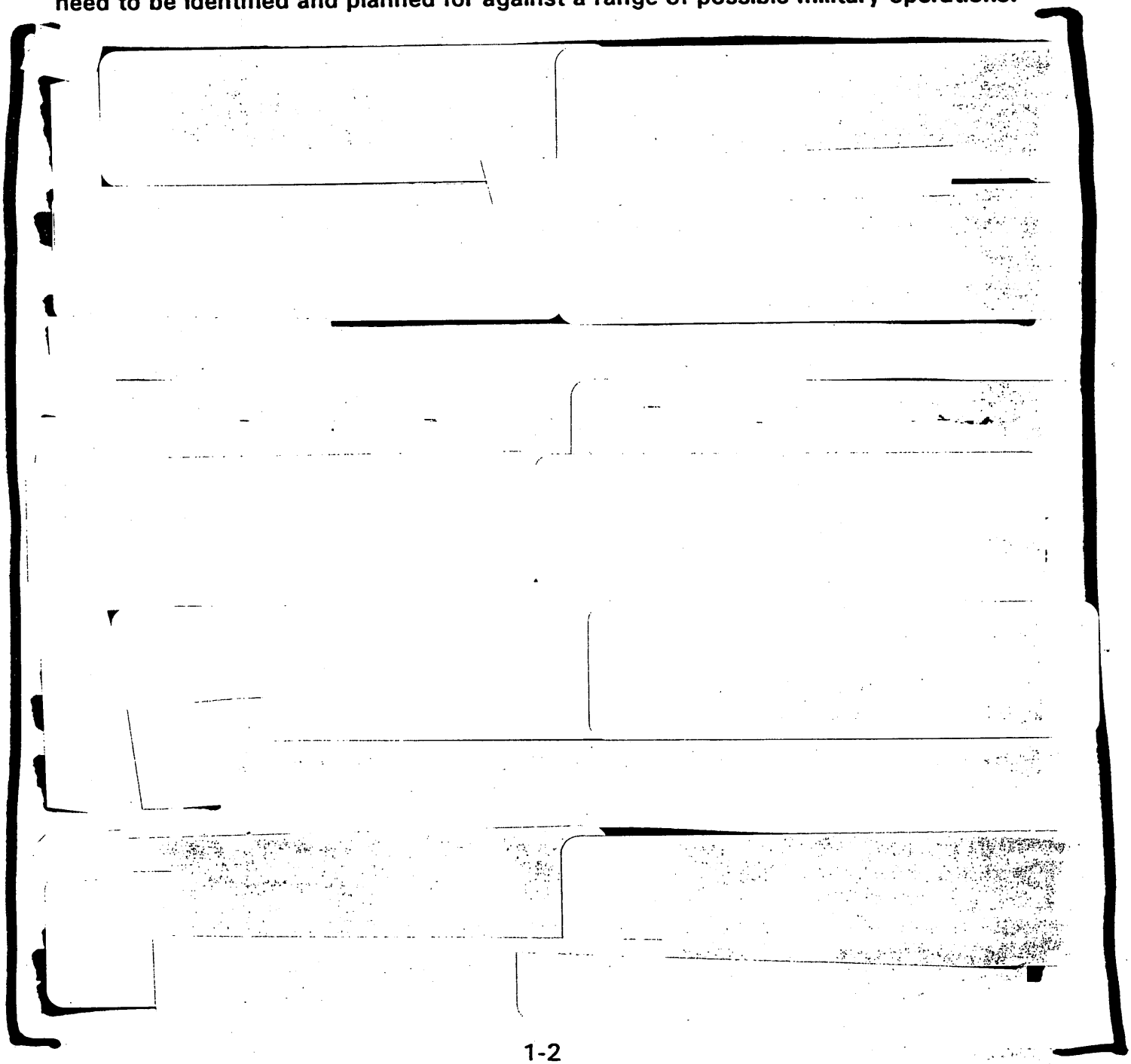

[redacted]

(U) In summary, much remains to be done to improve dissemination of intelligence. One of the recommendations within the report is the formation of a Dissemination Steering Group, under the leadership of the Assistant Secretary of Defense, Command, Control, Communications and Intelligence, to continue to define dissemination requirements and to foster joint program initiatives.

(U) The Intelligence Program Support Group is most appreciative of the tremendous support it received from study participants. It is hoped that this study adequately and accurately captures their concerns. Comments are solicited on the study's findings and recommendations.

BACKGROUND

(U) This study on dissemination of intelligence during Operation Desert Shield/Storm was commissioned by the Director, Intelligence Program Support Group and prepared under the direction of the Deputy Director for Product Evaluation and Customer Support. The final report is designed to distill the fundamental lessons addressing dissemination of intelligence information, assess their impact and formulate recommendations that will enhance the ability of the Defense intelligence community to disseminate intelligence in the future.

[redacted]

(U) The military is often accused of planning for the previous battle. There is, however, a wealth of data contained within the lessons learned by participants in Desert Storm that can be applied to a different range of military operations and used to plan for the future. We have attempted, in this report, to formulate recommendations which apply to a broad range of military operations.

[redacted]

during Desert Storm to move such vital information as target graphics, operational support packages and maps. These products contain large amounts of data and are not easily transmitted electronically.

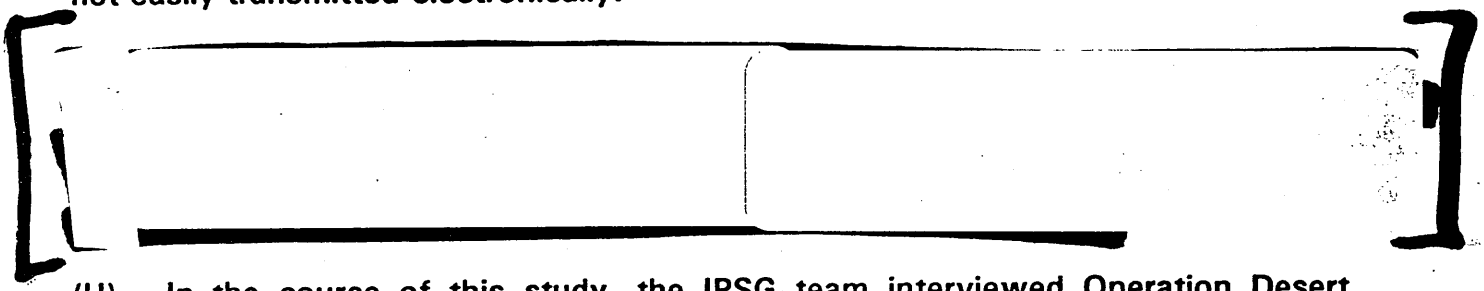

(U) In the course of this study, the IPSG team interviewed Operation Desert Shield/Desert Storm dissemination managers and, through the use of activity models, documented the processes they performed in moving intelligence to subordinate units. A wealth of information is contained in the models (found in the appendices of this report) that can be used to build dissemination doctrine and to support future dissemination program initiatives.

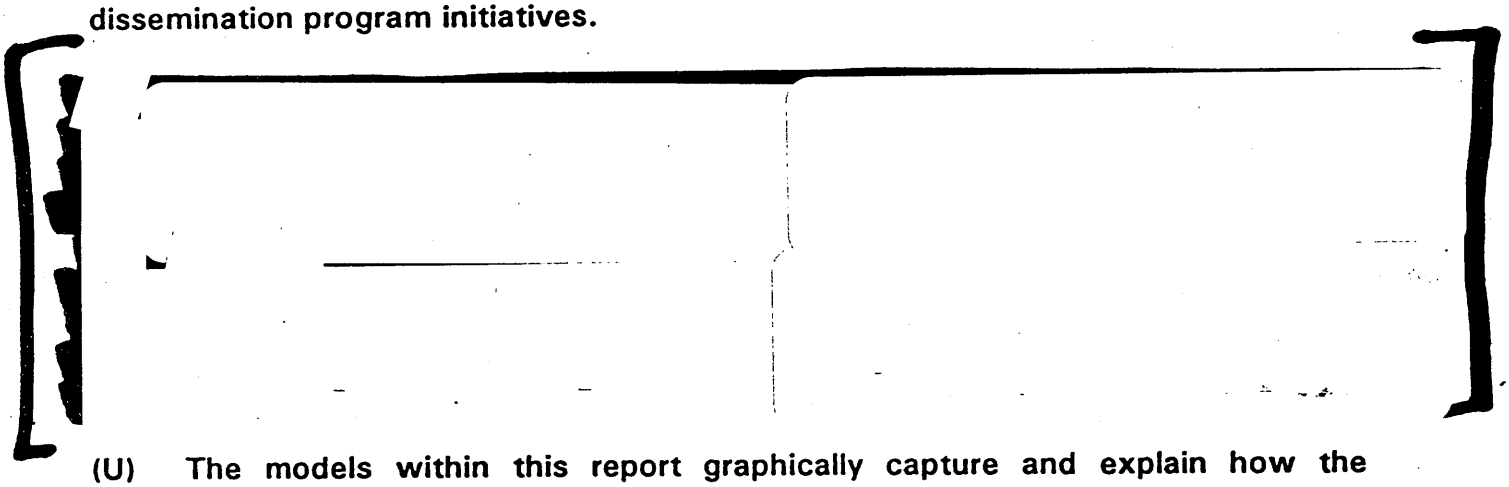

(U) The models within this report graphically capture and explain how the dissemination process worked and the impact of resource constraints and other limiting factors on the process. Models were developed by individuals involved in the management and performance of Operation Desert Shield/Storm dissemination function at the following organizations:

NATIONAL AND DEPARTMENTAL LEVEL

DEFENSE INTELLIGENCE AGENCY

DEFENSE MAPPING AGENCY

ARMY INTELLIGENCE AGENCY

ARMY INTELLIGENCE AND THREAT ANALYSIS CENTER (ITAC)

THEATER LEVEL

USCENTCOM: J-2

MAJOR COMPONENT LEVEL

ARCENT: VII CORPS

XVIII AIRBORNE CORPS

CENTAF: CENTAF/INP

NAVCENT: CARRIER GROUP EIGHT, USS THEODORE ROOSEVELT

MARCENT: I MEF

SOCCENT: J-2

(U) Dissemination was vital during all phases of Operation Desert Shield/Storm. The twenty one models developed during this study depict dissemination activities throughout the operation. The matrix at Figure 2-1 depicts the relationship of the models to the operational phases of Desert Shield and Storm. The following section in this report discusses the activity modeling process in greater detail. It is followed by a set of IPSG developed findings and recommendations based on analysis of the models and interviews with dissemination managers. The appendices contain the models developed by the dissemination managers.

(U) This report does not contain an assessment by the operational community of the utility of the intelligence received. The time elapsed since the operation precludes a detailed objective analysis of individual product utility in Desert Storm. Efforts are presently underway to conduct a zero-based review of intelligence requirements. It is hoped this effort, under the leadership of the Director, Defense Intelligence Agency, will further refine tactical intelligence needs.

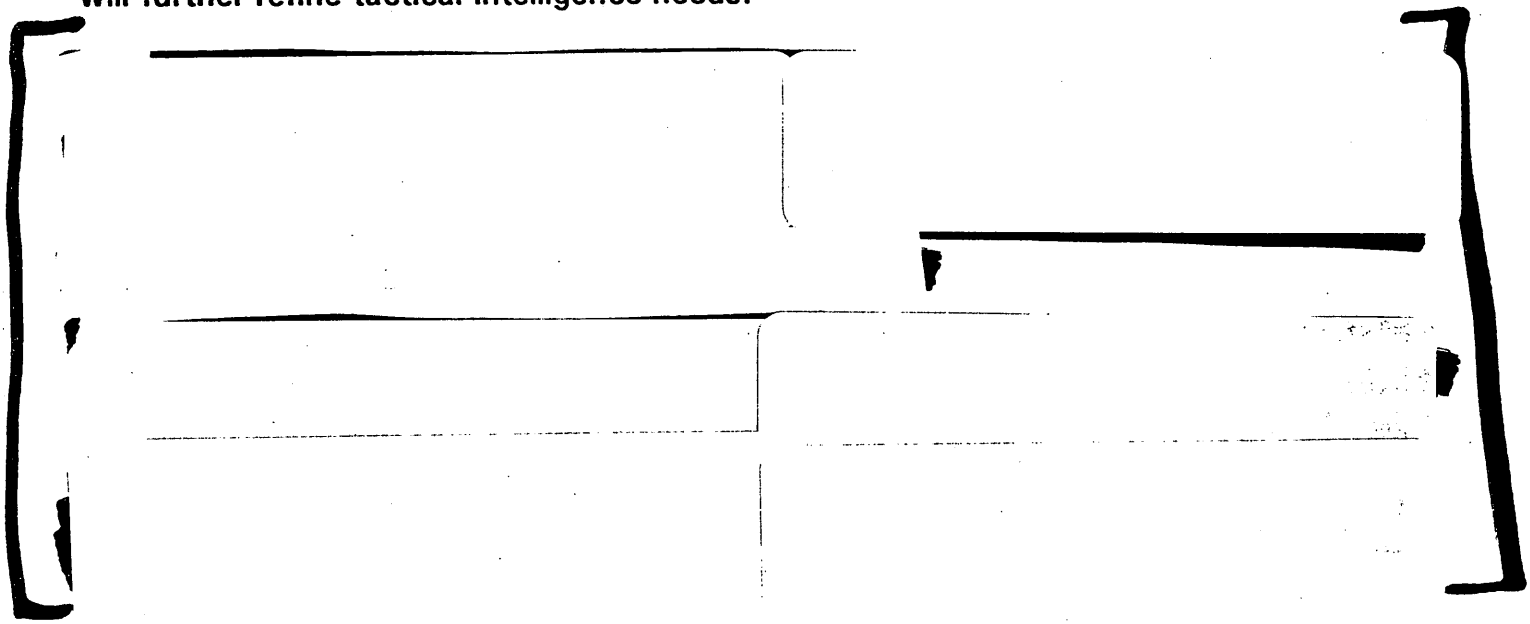

(U) The models within this report should be used as the starting point for the creation of a more robust and flexible dissemination system. This will require further examination of the data against detailed regional scenarios. Such analysis should be the basis for future intelligence dissemination planning.

FIGURE 2-1

Section 3 Project Definition and Approach (U)

(U) The Intelligence Program Support Group (IPSG) Dissemination Study focused on the dissemination of intelligence products during Operation Desert Shield/Storm. The study applied the Process Improvement Methodology using the IDEF modeling techniques. Subject matter experts (SMEs) responsible for implementing the dissemination process during Operation Desert Shield/Storm participated. The SMEs represented national, theater, and component level activities.

3.1 Scope (U)

(U) The intelligence cycle to support Operation Desert Shield/Storm began with the identification of customer needs and concluded with receipt of intelligence products by the end-user.

3.2 Objectives (U)

- Examine the need for increased emphasis on joint dissemination doctrine
- Document shortfalls in the dissemination process during Operation Desert Shield/Storm
- Identify improvement opportunities and recommendations
- Gain an understanding of the dissemination process during Operation Desert Shield/Storm
- Begin to identify maximum and minimum resource levels required for peacetime and wartime dissemination/distribution

SECRET

3.3 Team Members (U)

IPSG STAFF/D. APPLETON CO., INC.
Team Leader: Gail S. Howell

Name	Phone	Facsimile
Christiansen, Betty L, Dr.	703-693-0775	703-614-9778
Fischer, Stephen R, Col	703-693-0775	703-614-9778
Gardner, Geoff	703-573-7644	703-698-8219
Howell, Gail	703-693-8588	703-614-9778
Linehan, Pat, Dr.	703-693-0775	703-614-9778
Pollino, Robin L.	703-573-7644	703-698-8219
Stringer, Lorinda K.	703-573-7644	703-698-8219

SUBJECT MATTER EXPERTS

NAME	PHONE	TITLE (During DS)	Organization
Baggot, Robert LTC(P)	919-396-2481	Chief, CTOCSE	18 ABC
Bortmes, Leroy T. LCDR	301-763-3694	NOIC Crisis Action Team Coordinator	NAVMARINTCEN D I-OOC
Boswell, Larry	703-756-8623 703-756-8666 UNCL	Dissemination Manager	Army Intel Agency
Buch, Julie	703-640-2396		
Danford, Michael L. MGysGT	619-368-6950	NCOIC	1 MEF
Dunn, Martin D.	202-373-3747	Target Materials Program Office	DIA/OGA-4A
Ekberg, Larry MAJ	703-697-8372	AF Staff Representative	
Gregory, Stephanie MAJ	202-479-1981	Chief, Dissemination	UAAITAC
Hauser, Michele V. MAJ	202-767-6016	EUCOM Dissemination Manager	EUCOM
Hedges, Lawrence	703-756-5026		
Hubbard, Robert L. CDR	703-695-5026	N-2 NAVCENT Riyadh	US NAVY OP922R

NAME	PHONE	TITLE (During DS)	Organization
Kennedy, Robert CDR	813-850-6465 DSN 968-6465	RFI and Dissemination Manager	CENTCOM
Legrow, Allan CDR	703-697-1098	ACOS Intel	Commander Carrier Group Eight
Lewis, Cliff LTC	301-688-5774	Chief, Collections, Mgmt. Dissemination	VII Corps
Marshall, Arthur, R. Lt Col	703-746-8504	Chief NMIST (CS-IA)	DIA
Meyers, William LTC	703-806-5344	Executive Officer	Arcent G-2 US AIA
Milner, Stuart, Dr.	703-756-8644	Chief, Info. Mgmt. Office	AIA
Muir, Daniel CDR	703-614-0298	Operational Mission Tasker, "Blk Hole", CENTAF, Riyadh, SA	USN 09092081
Murphy, Sean	202-373-8725	Operational Intell Center Officer	DIA
Moran, Judy	703-695-1455	Intelligence Officer Specialist Disclosure	DIA
Olsen, Mark	202-373-8133	Dissemination Manager	DIA
Perrin, Susan MAJ	DSN 965-5553	RFI & Dissemination Manager	CENTAF/INX
Powell, Jon LtCol	703-285-9201	Assistant Deputy Director, Logistics	DMA
Sas, William LCDR	301-763-3692	Collection Manager	SOCCENT

3.4 CIM Process Improvement Methodology (U)

(U) The CIM Process Improvement Methodology was developed to aid an organization in its planning process to identify Business Process Issues and Improvement projects. Use of this methodology is intended to identify and eliminate non-value added activities, identify and clarify problems, identify improvement opportunities, provide a foundation for developing future detailed models and to facilitate a common understanding of the business requirements.

(U) The IDEF modeling techniques were used to develop Activity Models (known as IDEF0) . These models graphically and descriptively depict business processes and their basic data.

(U) The DoD Information Technology Policy Board has approved the use of IDEF0 modeling techniques as a common modeling language for the documentation of the business activities. The IDEF (ICAM Definition language) modeling techniques are precise and inclusive, supporting Activity Models, Data Models, consistent definitions and analytic matrices. The diagrams are easily understood by management, functional users, and information system specialists. The IDEF modeling methods were developed by the Government and are therefore public domain. (See section 3.5)

(U) Modeling is a structured, analytical method of studying and documenting business activities and the data needed to support their information needs. Modeling employs a language, or syntax, to enable documenting business processes and data in a structured format. This allows trained users to communicate with each other and the Information Systems Community.

(U) Activity Models (IDEF0) aid in analysis and documentation of the business process. Information flows and roles are defined (e.g., inputs, controls and outputs) for each activity or sub-activity. Additionally, the systems, people, and equipment that perform the activities (mechanisms) are recorded as part of the process.

(U) One of the most significant characteristics of the modeling process is its iterative and evolutionary nature. By definition, a model is a description of a part of the real world expressed in a language or structure at a particular point in time and point of view. The modeling techniques recognize that each model is an approximation, a snapshot, or an abstraction of the real thing. As we learn more about the process modeled, either from further study or by merely applying the model to everyday business, we discover enhancements or corrections that need to be made.

(U) A methodology that employs modeling methods must be able to accept the inevitable iterations of its models, and facilitate changes as they occur. Continual change is a normal occurrence in organizations, their policies, and their information systems. The modeling technique must be flexible enough to incorporate change as it occurs and facilitate change control in the future.

3.5 Introduction to Activity Models (U)

(U) An Activity Model is a representation of related business functions, within a limited subset of the enterprise. At a high level, the models may be used to understand what work is performed in a business area. At a lower level of detail, the models will depict how the work is performed. The primary purpose of the Activity Model is to discover the information needs, inputs, outputs, mechanisms and controls within the enterprise. An activity represents a process, action, or task that requires some amount of time to accomplish its objectives. An activity will transform a set of inputs into products, enabled by resources and constrained by a set of controls. It has a name which is shown as a single strong action verb with a single explicit object that describes the process, action, or task that an activity represents.

(U) Activity models are developed for several reasons. One of the most important uses of an Activity Model is to define the scope of a project or an enterprise. The model may represent as broad or as narrow a viewpoint as required. If several viewpoints are needed, separate models may be developed for each.

(U) Another use of the Activity Model is to enable a team to map out a transition from the AS-IS business practices to more productive and efficient TO-BE practices. In this manner, the baseline activities are documented and using a formalized approach, the TO-BE alternatives are determined.

(U) A third use for the Activity Models is as a data discovery and validation tool. The Activity Model shows relationships between activities, the information that is used to perform each activity and how that information flows between activities. Data requirements can be extracted from those information flows and applied to a specific Data Model.

(U) The team develops the Activity Models from knowledge about the subject area provided by participants from interviews, or facilitated sessions, with additional help from other Subject Matter Experts. They may also gain knowledge from any available materials such as documents, forms, procedures, and existing Activity Models. The scope, objectives and viewpoint boundaries help the modelers determine what is relevant, which views to prepare, and what to include in each model.

(U) An Activity Model has three components:

a. Node Tree
b. Context Diagram(s)
c. Decomposition Diagrams

(U) A Node Tree represents an activity hierarchy, with the node for an activity appearing above the nodes for its component sub-activities and with lines connecting the top node to each sub-activity node. It is analogous to a Work Breakdown Structure. The component nodes may be further decomposed into their sub-components until the modelers feel that they have adequately represented the required activity breakdown. Each node is labeled with the name of the activity or sub-activity it represents and a Node Tree location identifier consisting of a letter followed by one or more numerals. A Node Tree Diagram is often thought of as a table of contents for the project. As such, it depicts the breadth of the business area being modeled and the depth of the modeling effort. A representative Node Tree is shown in Figure 3-1.

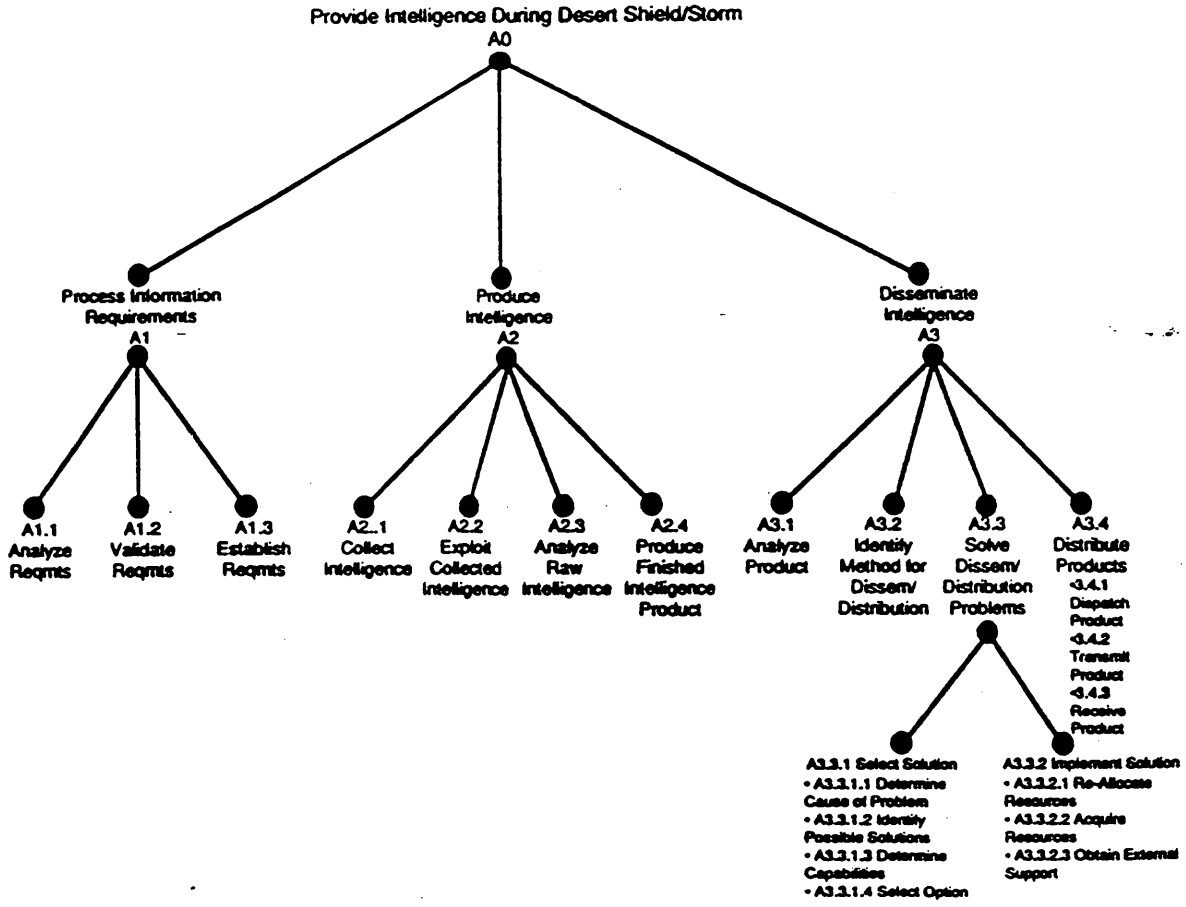

Figure 3-1 Node Tree (For Example Only) (U)

(U) A Context Diagram consists of a single activity box and its related Inputs, Controls, Outputs, and Mechanisms (ICOMs). An ICOM represents a type of information, data or object that is involved in an activity.

An ICOM has four possible roles relative to an activity:

a. Input: Information or materials which are transformed or consumed in the production of the outputs of an activity. (Arrow entering left side of an activity box)

b. Control: Information or materials that govern or constrain the operation of an activity. It regulates the transformation of inputs to outputs. (Arrow entering the top of the activity box).

c. Output: Information or materials that are produced by an activity or results from an activity. (Arrow leaving the right side of an activity box).

d. Mechanism: Usually people, machines, resources, or existing systems that perform (enable) an activity or provide energy to an activity. (Arrow entering the bottom of an activity box).

An example of a Context Diagram is at Figure 3-2. (U)

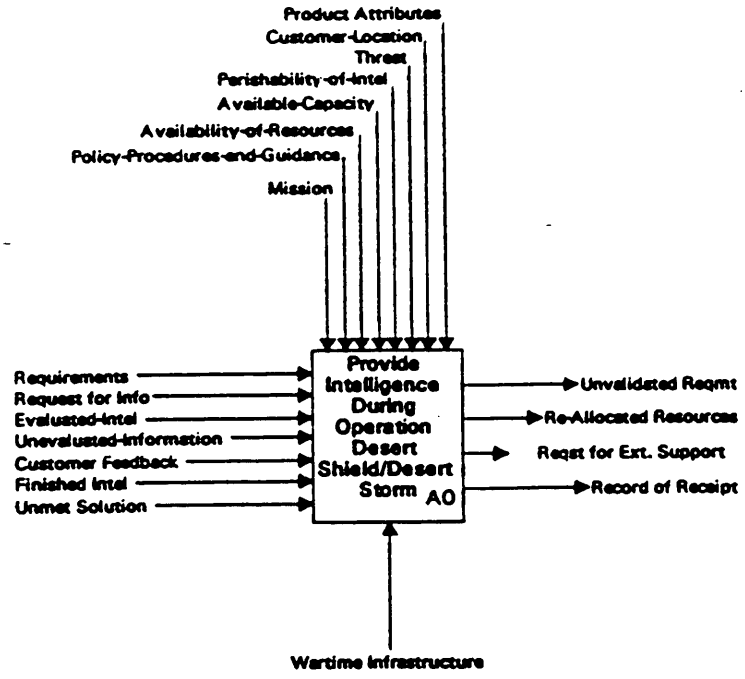

Figure 3-2 Context Diagram (For Example Only) (U)

(U) A Decomposition Diagram describes the details of an activity and its relationships to other activities in its decomposition level. In the decomposition process, the modelers break down an activity by determining its sub-activities. The ICOMs that interact with the activities are depicted which documents activity associations. See the discussion of Context Diagram for an explanation of ICOMs.

(U) Unlike a Node Tree, which can show several levels of sub-component activities at once, a decomposition diagram shows only one level below the parent activity which is being further detailed. The activity modelers check to insure that the activity views are consistent from one level to the next. An example of a Decomposition Diagram is shown in Figure 3-3.

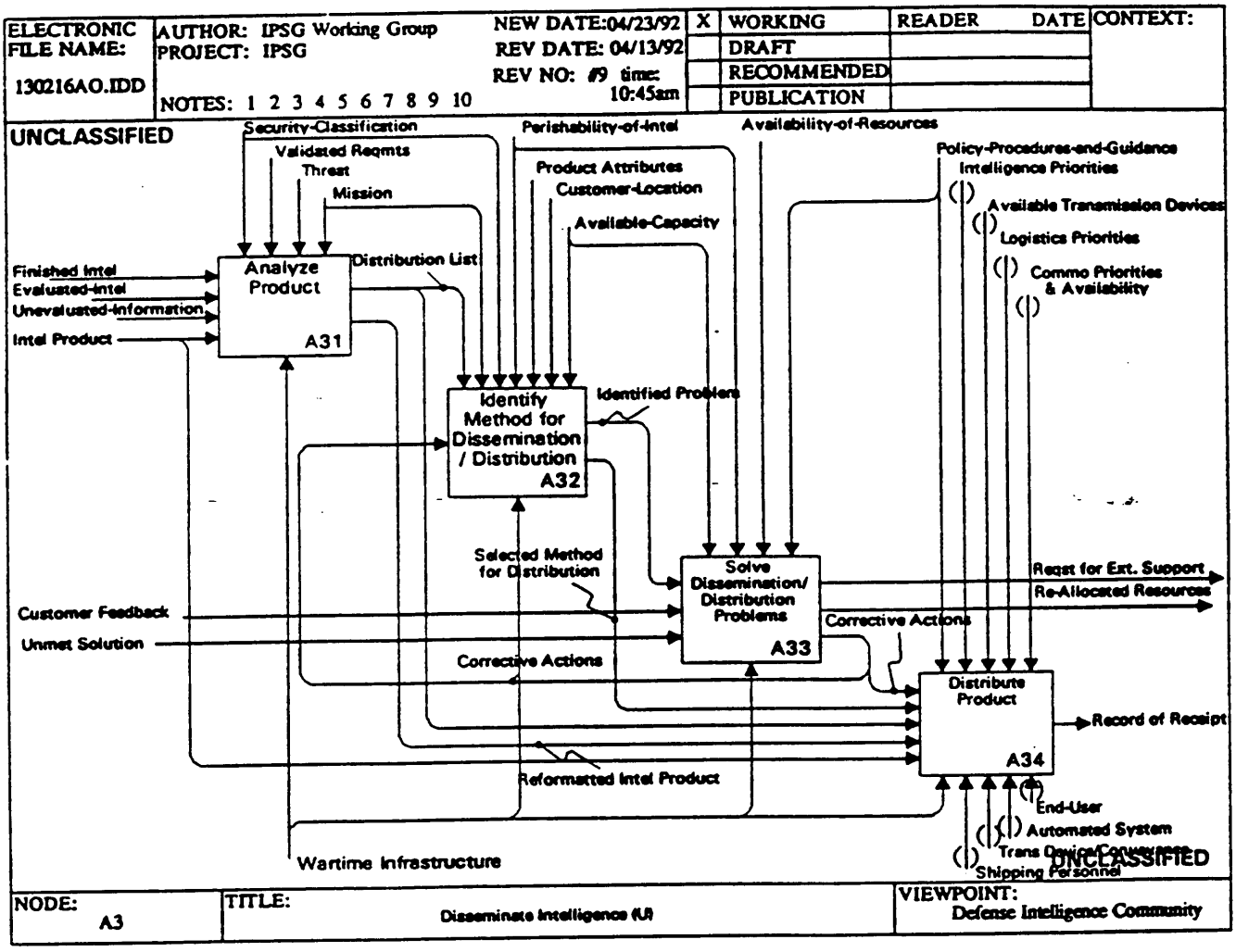

Figure 3-3 Decomposition Diagram (For Example Only) (U)

(U) FINDING: DOCTRINE.

[redacted]

(U) DISCUSSION:

[redacted]

(U) Extremely dedicated people at all levels worked hard to evolve structures, systems and methods to move intelligence. Much of the success was due to the initiative and aggressiveness of these individuals. A support structure was not in place to help them quickly resolve their dissemination problems.

[redacted]

(U) In its simplest terms, dissemination management is knowing who needs what, who has asked for what, who is producing a response to the request or is doing initiative reporting, when and how it will arrive (to include provision of a means/infrastructure for movement of information in the response), knowing whether the original requestor was satisfied, and whether the information should be shared with other components or units. Throughout this study's modeling process, dissemination managers consistently cited similar functions when describing how they performed their jobs. If activities varied significantly, joint dissemination doctrine would be difficult to implement. However, in the case of dissemination, the similarity of activities supports doctrinal development. The constraints and mechanisms will vary depending on the scope of the operation, and future resourcing of dissemination elements.

[redacted]

(U) It is important, at this time, to clearly delineate the dissemination responsibilities of the Unified Commands because decisions are being made on how to resource their Joint Intelligence Centers (JICs). If the JICs are to be the funnel for production they need to be resourced to accomplish this responsibility. The Defense Intelligence Agency has also recently established a National Military Joint Intelligence Center (NMJIC). Its information management responsibilities and logistical requirements also require further definition.

(U) Information management is a principle responsibility of the J-2s, N-2s, G-2s, and IN. Good information management requires an in-depth knowledge of operational requirements, quality control of the products provided to the customer, deconfliction of substantive issues and duplicative production, and satisfaction of the consumer in terms of both timeliness and quality. These responsibilities must be emphasized in joint doctrine.

(U) Dissemination architectures should be developed based on joint doctrine and the new National Military Strategy. The national, theater and tactical logistics (to include communications) requirements to support dissemination should also be included in operations and contingency plans. Dissemination procedures should be exercised.

(U) **RECOMMENDATIONS:**

(U) The Defense Intelligence Agency has been tasked to develop joint intelligence doctrine. It should also include information management (dissemination is a major part of information management) as a major doctrinal area.

(U) ASD/C3I should establish a Dissemination Steering Group chartered to ensure dissemination architectures, dissemination support plans and training are developed, and to share information on dissemination initiatives.

(U) The information management responsibilities and logistical support requirements of the National Military JIC and the Theater JICs should be clearly identified. The Director, Defense Intelligence Agency, should take the lead in coordination with the Director, National Security Agency and the Director, Defense Mapping Agency.

(U) FINDING: PERSONNEL AND EQUIPMENT.

[redacted]

(U) DISCUSSION:

[redacted]

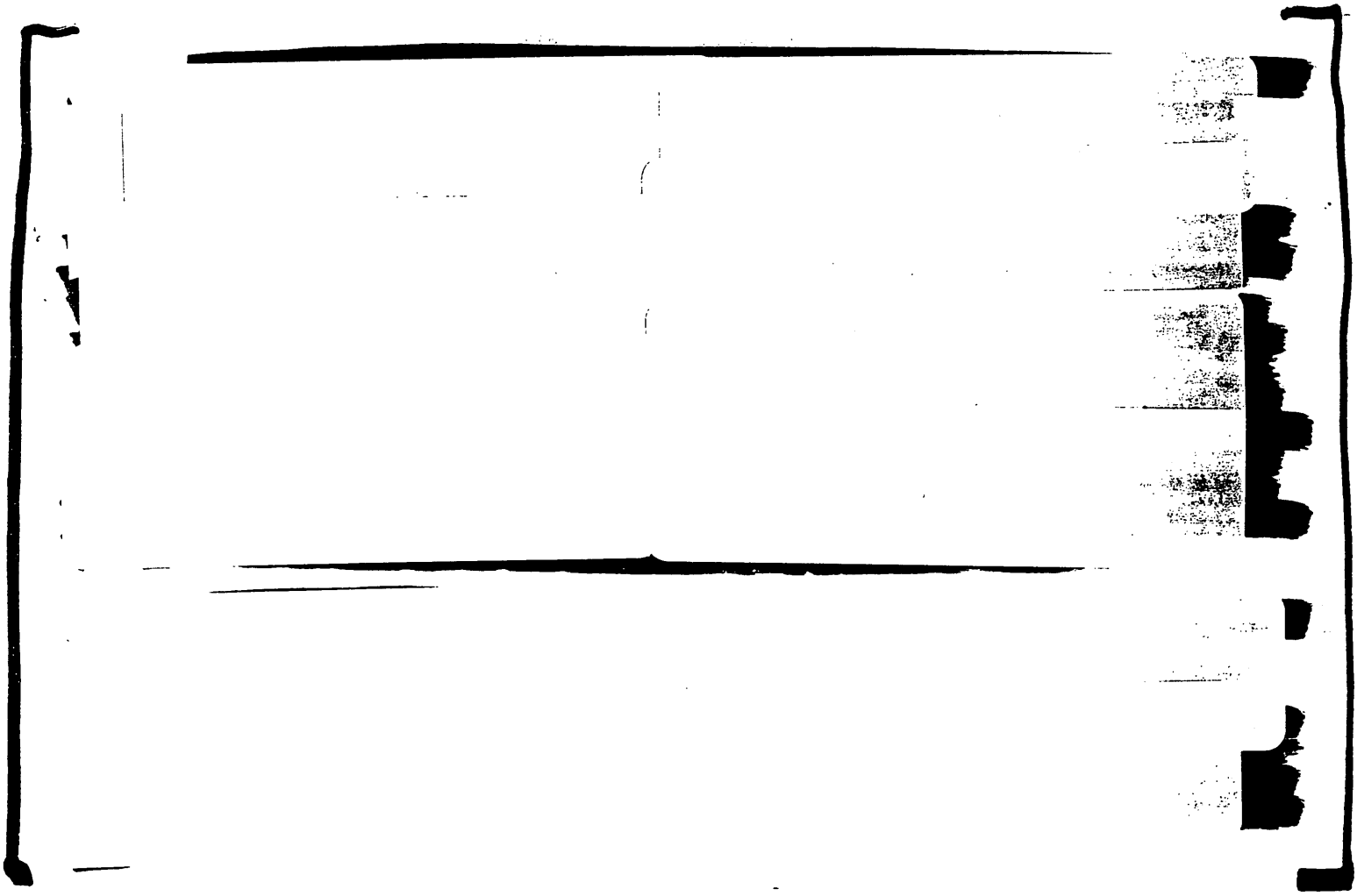

(U) The Unified Commands should establish reserve elements for dissemination at the Theater level. During peacetime, the CINC has limited dissemination responsibilities and thus requires limited dissemination personnel. Reservists could be used to augment the dissemination element in wartime. The designated reserve unit could include individuals trained in foreign releasibility procedures as well as dissemination. Components should also identify reservist billets for dissemination.

(U) The Unified Commands and Services should identify the equipment required to support dissemination activities. Deployment packages of dissemination supplies and equipment should be established so that alerted units will deploy with adequate support.

(U) FINDING: TRANSPORTATION OF HARD COPY DOCUMENTS.

[redacted]

(U) Initially, the Defense Courier Service encountered difficulties in achieving the priorities necessary to move intelligence because of the backlog of logistical material into the theater. The movement of maps and charts also were delayed until the priorities of the movement schedule were changed.

[redacted]

[redacted]

(U) **RECOMMENDATIONS:**

[redacted]

(U) At all echelons, intelligence entities are dependent on the commanders' assessments of the importance of intelligence in relation to other mission areas that also require logistical support. Intelligence planners must plan for situations where intelligence does not receive priority, and try to selectively pre-position as much intelligence as possible.

(U) FINDING: COMMUNICATIONS AND PRODUCTION MANAGEMENT.

(U) DISCUSSION:

(U) The communications architecture and shortfalls during Operation Desert Shield/Storm have been documented by the Intelligence and Communications Architecture Directorate of the IPSG. However, there are communications issues which relate to request, production and dissemination management that are appropriate for coverage within this report.

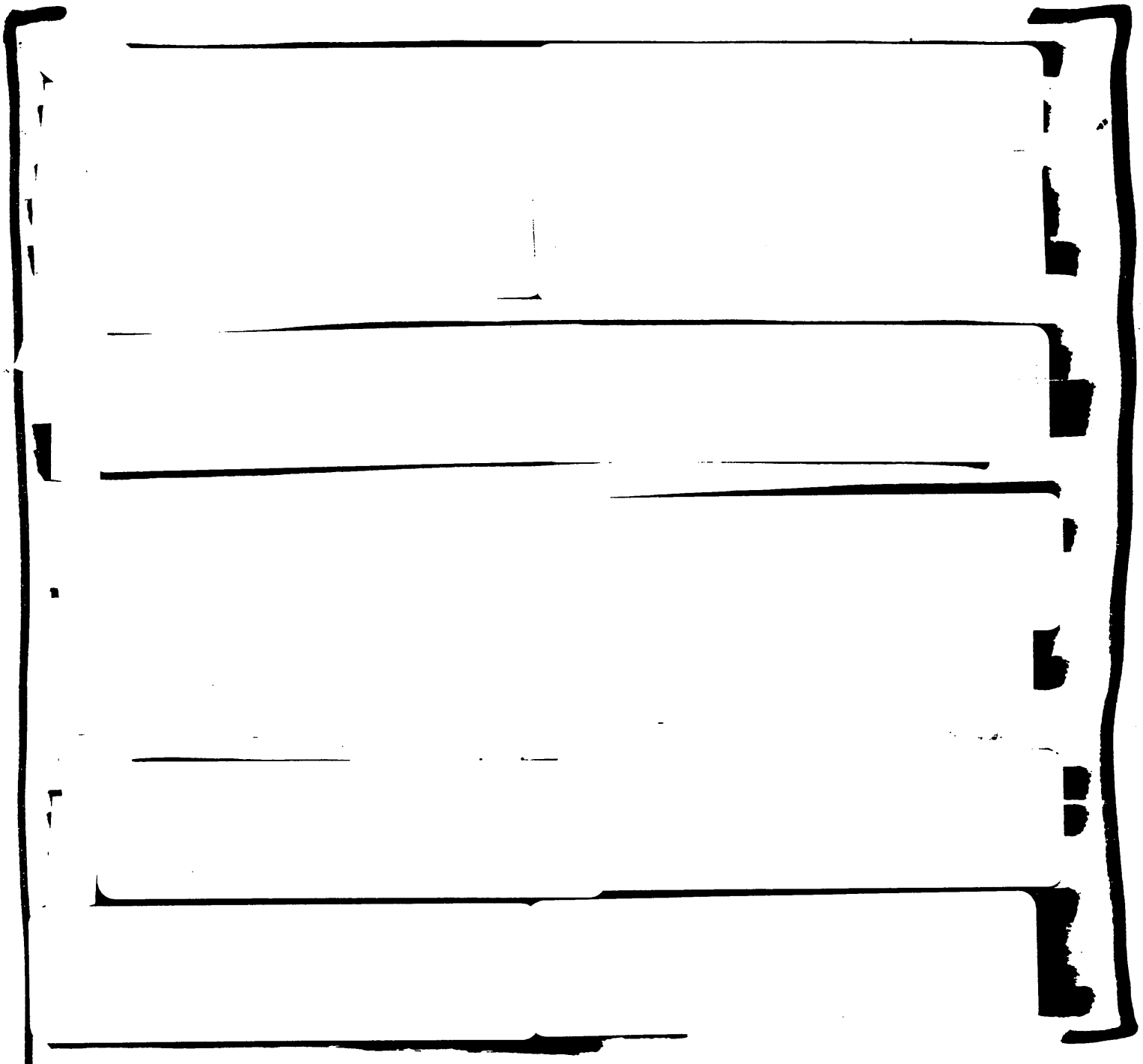

(U) **RECOMMENDATIONS:**

(U) DIA, the Unified Commands, and the Services should re-examine all-source reporting requirements in support of tactical operations. At a minimum, doctrine on intelligence summary reporting -- who should produce it and what echelon should receive it - is achievable in the short term.

(U) Unified Commands and Service components should establish and practice, during exercises, procedures for minimizing transmission of intelligence reports.

(U) FINDING: HARDCOPY PRODUCTS NEEDED AT LOWER LEVELS.

(U) DISCUSSION: The high volume of intelligence products flowing into the theater challenged, and in some cases overwhelmed, the existing distribution systems. The dissemination of hard copy intelligence products in-theater was not easily accomplished; the sheer volume of information made distribution difficult. Imagery dissemination to subordinate units presented a challenge. In almost every case, timeliness was the chief problem in hard copy dissemination.

(U) ILLUSTRATIVE EXAMPLES OF HARD COPY PRODUCTS PRODUCED/UTILIZED:

1. (U) The Defense Mapping Agency shipped some 83 million maps and charts to the theater map depot--80 million by air (3000 tons) and 3 million by sea (150 tons). Of the total, 60 million copies were issued to combat forces--35 million copies consumed, 5 million returned as excess, and 20 million recovered at the conclusion of operations.

4. (U) Additionally, ITAC dispatched some 200,000 copies of How They Fight DESERT SHIELD Order of Battle, 280,000 copies of How they Fight DESERT SHIELD "Friendly Forces" Order of Battle, and 370,000 copies of Identifying the Iraqi Threat and How They Fight to deployed subordinate units. Smaller quantities of the same products were also dispatched to Marine units.

[redacted]

(U) RECOMMENDATIONS:

1. (U) That ASD/C3I work to ensure that, in the future, improved high capacity communications capabilities will be available to support efficient use of intelligence transmission systems.

2. (U) The Unified Commands and Services should program for sufficient numbers of terminals (imagery, message, etc.) at the unit level, and ensure the terminal operators receive adequate training.

(U) FINDING: OPERATIONS SECURITY IMPEDIMENTS.

(U) DISCUSSION:

(U) RECOMMENDATIONS:

1. (U) Every organization should ensure that personnel involved in the RFI process are cleared for access to all "special" programs to ensure RFIs are properly documented, prioritized, and reported back to the requestor.

2. (U) Every organization should have a designated "Focal Point" point of contact with assigned backups and with the authority to read persons on.

3. (U) Each organization should have an established training program on the procedures governing the "Focal Point" system.

(U) FINDING: FOREIGN DISCLOSURE.

[ ]

(U) DISCUSSION: Part of the problem stemmed from the fact that CENTCOM did not have a dedicated foreign disclosure officer. The one individual who served part time in this capacity, deployed forward leaving no one with foreign disclosure experience at CENTCOM Rear. Because the forward-deployed individual served only in a part time capacity, CENTCOM Forward was not able to exercise 24-hour disclosure authority. CENTCOM still does not have a dedicated foreign disclosure officer.

(U) Other problems stemmed from a general reluctance on the part of CENTCOM to exercise its Emergency Dissemination Authority (EDA) as documented theater policy.[1] A large part of this reluctance can be attributed to a lack of understanding and training. CENTCOM personnel did not know how to sanitize information because they had not been adequately trained to perform this function.

(U) During Operation Desert Shield/Storm, DIA/Foreign Exchange and Disclosure Division acted as a dissemination node for US consumers for receipt of the Military Situation Summary (MSS). The Foreign Exchange and Disclosure Division had sanitized the MSS for release to Allies. When US forces with only collateral access discovered this resource, they requested the product directly from the Foreign Exchange and Disclosure Division.

(U) Other problems: DIA was not adequately manned to provide 24-hour release authority and at the same time carry on its non-war related activities. Additionally, the lack of dedicated space in the Intelligence Task Force area during the early part of Operation Desert Shield/Storm hampered the coordination process.

(U) EXAMPLES OF WHAT IMPACT THIS PROBLEM HAD ON DISSEMINATION:

1. (U) An intelligence factbook on Iraqi forces prepared by the Army Staff contained information originally classified by a Third Party. Production of this product was halted for several weeks until declassification and release of the Third Party information could be obtained.

---

[1]DIA/Foreign Exchange and Disclosure Division sent a representative to Riyadh in early August to establish joint DIA/CENTCOM policy regarding EDA/proper authority. This authority should have been exercised from date forward.

[redacted]

(U) **RECOMMENDATIONS:**

1. (U) That Unified Commands maintain at least two personnel fully-trained in foreign disclosure policies and procedures. These personnel should be available to serve full-time as foreign disclosure authorities during hostilities. At least one should be available for forward deployment. Foreign disclosure training should be arranged in coordination with DIA and NSA.

2. (U) That a contingent of six reservists (four officers and two NCOs) be assigned against billets in DIA/Foreign Exchange and Disclosure Division for training and mobilization to the NMJIC during crises. At a minimum, these augmentees should be required to perform their two-week annual tour with the Foreign Exchange and Disclosure Division and be certified by DIA as mobilization-ready. DIA should develop a plan to accommodate and integrate these reservists in the event hostilities require their activation.

3. (U) That DIA, acting in coordination with NSA, ensure intelligence producers and disseminators make provision for producing and/or sanitizing products for dissemination to the large number of tactical users cleared only for collateral information

4. (U) That DIA integrate the foreign disclosure function into the National Military JIC to expedite the processing, coordination, and release of intelligence products to allies.

5. (U) That DIA ensure the foreign disclosure function is integrated into intelligence doctrine for coalition warfare.

(U) FINDING: RFI HANDLING PROCEDURES.

[redacted]

(U) DISCUSSION: The lack of a standardized method for handling RFIs became obvious during the first two to three months of Operation Desert Shield when DoD intelligence producers were inundated with requests for intelligence products directly from units deploying to the theater. After October, CENTCOM solved part of the problem by directing that all RFIs from units already in theater had to be originated by either CENTCOM or a Component headquarters. Other problems, however, remained unresolved.

(U) One major problem experienced at the theater and component levels was the lack of standardized RFI tracking procedures to match products with customers and to monitor RFI satisfaction. The experience at CENTAF exemplifies the problem. A numbering system to track requests and match products with customers which had been used prior to deployment was found deficient and had to be revised several times in order to establish a semi-workable system. The CENTAF numbering system, however, was never really adequate because production and exploitation elements apparently did not see the need for the RFI number and would drop it while processing the information request. When products arrived back at CENTAF without the original RFI number, it was extremely difficult to match up the imagery and other hardcopy products with the requestor needing the information. Not only did this have an impact on how rapidly the product could be disseminated, but it also meant that some requestors never received their product.

(U) Complicating the RFI tracking problem was the lack of computer support and standardized RFI data base software for monitoring RFIs and for inventorying and controlling the distribution of packaged products. The VII Corps CTOC Support Element went to Saudi Arabia with just a few microcomputers to service the entire element; it had no data base software. The CENTAF RFI section received a computer one week prior to the start of the war -- too late to be of any use.

(U) Yet another problem arose from the fact that requestors failed to assign realistic priorities to RFIs. Most RFIs came in as Priority One requests requiring re-prioritization by RFI managers, who might not fully appreciate the need for a specific request and consequently were not always able to make the best assessment of priority needs.

(U) There is evidence as well that CENTCOM and the component commands did not anticipate and were not prepared to handle the large number of RFIs they would be required to process. Within CENTAF, the RFI function was initially handled on an ad hoc basis by various members of the collection management team. It was made a separate function three weeks after the air campaign started. As the workload increased, more and more personnel had to be added until a complete division was finally created.

(U) **RECOMMENDATIONS:**

1. (U) That DIA, in coordination with NSA, assess the feasibility of developing a standard RFI numbering system for both automated and manual use throughout the DoD which would assign a unique number to each RFI (whether it be for collection or production). This number would accompany the RFI throughout the collection, exploitation, and/or production cycles back to the originator. This would eliminate many duplicate requests for information and allow for efficient linkage of customer requests with intelligence production.

2. (U) That Unified Commands regularly review peacetime dissemination requirements for those units that would transfer to them in the event of crisis or conflict in order to ensure that the intelligence holdings of those units provide an adequate baseline for contingency operations. This would reduce the need for much initial RFI production.

3. (U) That DIA, in coordination with NSA, develop RFI automation standards and software for use at each echelon for logging and tracking RFIs. To the extent possible these standards should build on methodologies which were developed in theater during the war.

4. (U) That each command plan and program for sufficient resources -- including personnel and computers -- to accomplish the RFI management function during contingency operations.

5. (U) That personnel involved in RFI processing be cleared for access to as many special programs as necessary so they can make educated decisions regarding RFI priorities.

(U) FINDING: DISSEMINATION TRACKING.

(U) The DoD intelligence production community lacks a dissemination tracking and inventory control system to efficiently and effectively enable dissemination personnel to accurately determine the status of a distributed product and to ensure that it was delivered to the intended recipient.

(U) **DISCUSSION:** There were numerous reports during Operation Desert Shield/Storm of lost/undelivered shipments of documents, misplaced pallets of maps, uncertainties on the part of disseminators about whether the needs of intelligence requestors were being satisfied, and a general inability to track products through the dissemination chain and to ensure the linkage of an RFI originator with the requested intelligence product. In the case of DIA, no attempt was made to verify whether the intended recipient ever received the product or when it was received. Likewise, at most dissemination nodes the job was considered finished when the product left that node. Intelligence mailrooms also experienced inventory tracking problems. The problem at ITAC led their mailroom personnel to developed an initiative using an Rbase concept compatible with dBase, DOS, and SAFE. The concept provided a mechanism for controlling their own distribution list for produced products and maintaining an inventory. It could be used for the distribution of both collateral and SCI material. DMA also used a number of different computer programs to control inventory and track the dissemination of map and chart products.

(U) **RECOMMENDATION:** That a DIA, in coordination with DMA, assess the feasibility of implementing the Air Force Materiel Command's well-established LOGMAR (bar coding) system throughout the DoD intelligence and mapping dissemination systems to improve audit/control procedures, increase shipping and handling accuracy, reduce handling costs and error rates, and improve communication between producer and recipient. It is also recommended that the assessment include a review of the feasibility of embedding an RFI number into the code.

(U) FINDING: DISSEMINATION TRAINING

[redacted]

(U) DISCUSSION: Individuals called upon to perform dissemination management duties during Desert Shield/Storm had received neither on-the-job nor formal dissemination training prior to the operation. Guidance, such as standard operating procedures (SOPs) on dissemination activities, was not available to assist untrained individuals.

(U) Currently, there is no identifiable block of dissemination training in joint and Service intelligence schools. The training that is provided is limited to eight hours spread over either an 18-week tactical intelligence course, 23-week targeting course, or a six-month imagery course. The Defense Intelligence College, managed by DIA, offers no dissemination training.

(U) From the many Subject Matter Experts (SME's) interviewed, a consistent pattern of training shortfalls became apparent, including the following:

- how to request dissemination of previously produced intelligence
- how to request and manage dissemination via electrical message
- operation of automated intelligence data bases
- RFI management
- collection management procedures
- appropriate procedures/policy on declassifying intelligence products
- the inability to write Statements of Intelligence Interest (SII)

[redacted]

(U) It is also important to recognize that wartime dissemination requirements (timeliness and volume of intelligence products) far exceed peacetime requirements. The increased volume requires a significant increase in manning and other dissemination support resources. The number of trained dissemination personnel required during peacetime operations is significantly lower than those needed to support wartime requirements.

(U) It is concluded that the majority of dissemination managers and supporting staff for CENTCOM, component command's headquarters, personnel brought into dissemination operations as forces built up, and intelligence personnel outside of CENTCOM's area of operation, were not adequately trained in dissemination procedures. This lack of training can be attributed to both the lack of unit level training and the non-inclusion of dissemination in joint and Service intelligence schools' curriculum for either intelligence officers or enlisted personnel.

(U) RECOMMENDATIONS:

1. (U) The Commands and Services should ensure standard operating procedures for dissemination of intelligence are developed and that the procedures are practiced during exercises.

2. (U) Dissemination should be included in Service intelligence schools curriculum.

3. (U) The Defense Intelligence College should develop a dissemination course targeted at those individuals who will be assigned dissemination management duties at the Unified Commands.

4. (U) As a starting point for curriculum development, the following subset of dissemination course objectives and blocks of instruction (see below) developed by DIA in 1988 should be reviewed:

Dissemination Course Objectives (U)

a. (U) Be familiar with the DoD intelligence dissemination.

b. (U) Be able to obtain, on either a recurring or one time basis, mission essential intelligence in accordance with established policy and procedure.

c. (U) Understand the relationships between collection, production, and dissemination requirements and the intelligence consumer.

d. (U) Have an awareness of the impact of current and emerging technologies on intelligence dissemination.

e. (U) Be familiar with dissemination processes of, DoD/DIA and other national level agencies and producers.

Dissemination Training Objectives by Block of Instruction (U)

a. (U) *Introduction to Intelligence Dissemination:*

Understand:

1. (U) What dissemination is and how the DoD system works.

2. (U) What types of intelligence products are disseminated through this system.

3. (U) How the intelligence process works; from Statements of Intelligence Interest (SII) to request for secondary dissemination.

4. (U) Dissemination problem areas in peacetime, crisis situations and wartime and ways to correct them.

b. (U) SII Workshop:

Be able to:

1. (U) Properly write an organizations mission/function statement which supports and justifies receipt of intelligence for which the organization has a "need to know".

2. (U) Use both the Collateral Recurring Document Listing (CRDL) and SCI Recurring Document Listing (SCIRDL) to obtain initial dissemination for required finished intelligence which is produced on a scheduled basis.

3. (U) Create a subject and geographic areas of interest profile for receipt of non-recurring finished intelligence and intelligence information reports using the Defense Intelligence Thesaurus.

c. (U) NSA Product Dissemination:

1. (U) Understand how DIA, the Services, and NSA interface on the dissemination of SIGINT end product.

2. (U) Be familiar with the contents and workings of the NSA SIGINT Catalog system.

3. (U) Be able to use the NSA SIGINT Catalog system to properly register SIGINT end product dissemination requirements through command validation channels to NSA.

4. (U) Be familiar with procedures for obtaining intelligence produced by, or containing information from, NSA which is handled in special compartments or carries special caveats.

d. (U) CIA Product Dissemination:

[redacted]

2. (U) Understand the Director of Central Intelligence Directives (DCIDs) as they relate to the dissemination and handling of intelligence bearing the ORCON and SPECAT caveats.

e. (U) Video Intelligence:

1. (U) Be aware that intelligence is being collected, stored, and disseminated in video format.

2. (U) Understand the capabilities and limitations of video as an intelligence medium.

3. (U) Be familiar with the kinds of information available on video, which organizations store and disseminate video, and how video intelligence can be obtained.

f. (U) Production Overview:

1. (U) Understand the mission and capabilities of DIA, NSA, the Services and U&S Commands as a producers of Military Intelligence.

2. (U) Be familiar with the procedures for registering Intelligence Production Requirements (IPRs) and RFIs.

3. (U) Understand the differences and relationship between production requirements and dissemination requirements.

4. (U) Understand how intelligence production relates to intelligence dissemination.

g. (U) Collection Overview:

1. (U) Understand the mission of DIA, NSA, the Services and Unified Commands in Intelligence Collection.

2. (U) Understand the relationship between Collection requirements and Dissemination requirements.

3. (U) Be familiar with how to register Intelligence Collection requirements.

h. (U) Imagery Dissemination:

1. (U) Understand the relationship between Imagery collection and Imagery dissemination for both National level and theater resources.

2. (U) Understand DIA's role in imagery processing and dissemination for overhead and hand held imagery.

3. (U) Be familiar with the role of optical disk technology in imagery exploitation and dissemination.

i. (U) Automated Data Bases:

1. (U) Be familiar with the variety of automated intelligence data bases used by the intelligence community.

2. (U) Understand the relationship between automated data bases and intelligence dissemination.

j. (U) Crisis Dissemination:

1. (U) Understand CIAs, DIAs, NSAs, and the Services mission and capabilities to provide crisis intelligence support to the Unified Commands and their operational forces.

2. (U) Understand how intelligence is disseminated in a crisis situation and how such support is requested.

k. (U) Library Management: Understand how to establish and maintain an intelligence library, to include pre-deployment packages and archival imagery.

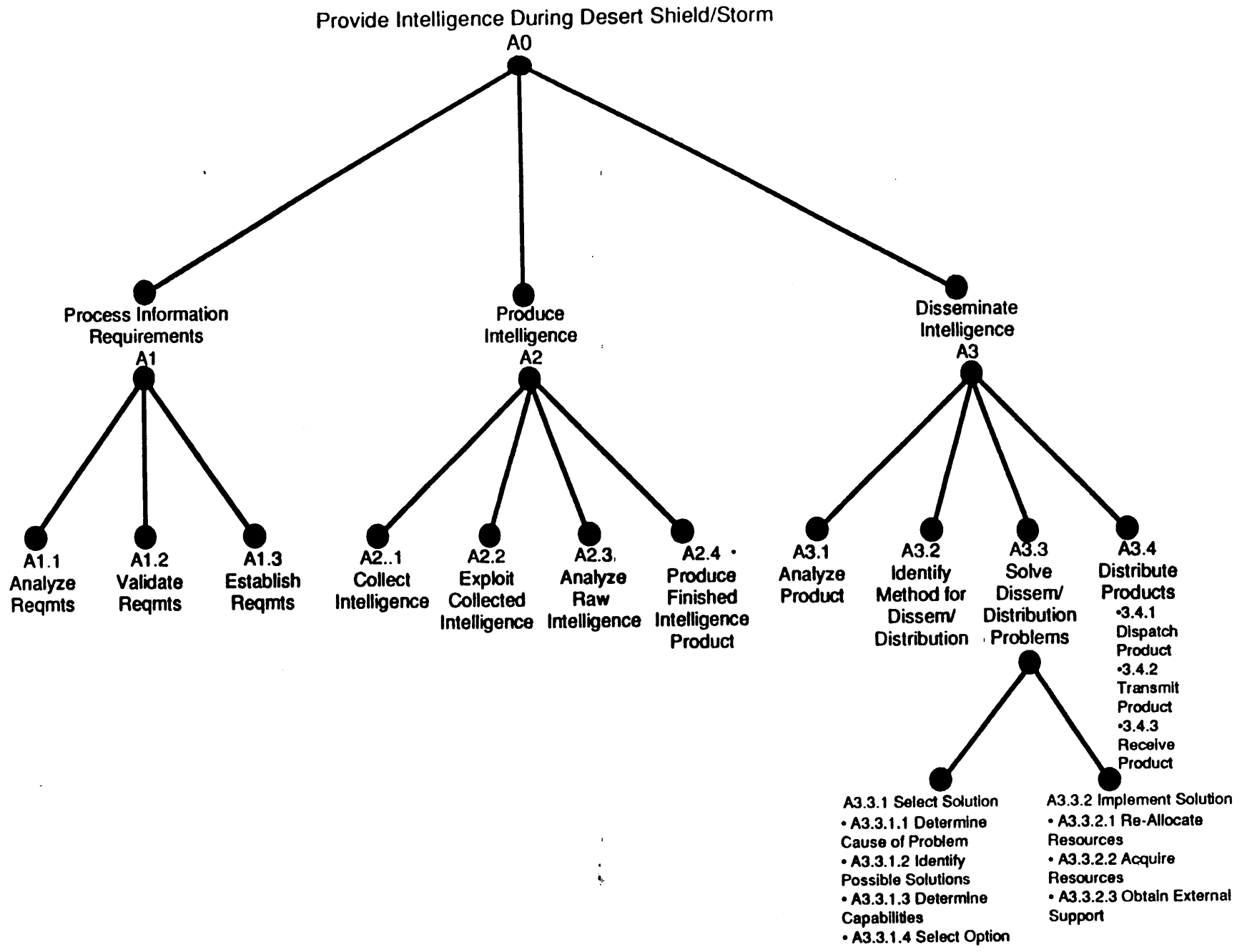
Provide Intelligence During Desert Shield/Storm
A0
Process Information Requirements
A1
Produce Intelligence
A2
Disseminate Intelligence
A3
A1.1 Analyze Reqmts
A1.2 Validate Reqmts
A1.3 Establish Reqmts
A2..1 Collect Intelligence
A2.2 Exploit Collected Intelligence
A2.3 Analyze Raw Intelligence
A2.4 Produce Finished Intelligence Product
A3.1 Analyze Product
A3.2 Identify Method for Dissem/ Distribution
A3.3 Solve Dissem/ Distribution Problems
A3.4 Distribute Products
•3.4.1 Dispatch Product
•3.4.2 Transmit Product
•3.4.3 Receive Product
A3.3.1 Select Solution
• A3.3.1.1 Determine Cause of Problem
• A3.3.1.2 Identify Possible Solutions
• A3.3.1.3 Determine Capabilities
• A3.3.1.4 Select Option
A3.3.2 Implement Solution
• A3.3.2.1 Re-Allocate Resources
• A3.3.2.2 Acquire Resources
• A3.3.2.3 Obtain External Support

ELECTR C FILE NAME: 130216AO.IDD	AUTHOR: IPSG Working Group PROJECT: IPSG NOTES: 1 2 3 4 5 6 7 8 9 10	NEW DAT 4/23/92 REV DATE: 04/13/92 REV NO: #9 time: 10:45am	X	WORKING	READER DATE	NTEXT:
				DRAFT		
				RECOMMENDED		
				PUBLICATION		

UNCLASSIFIED

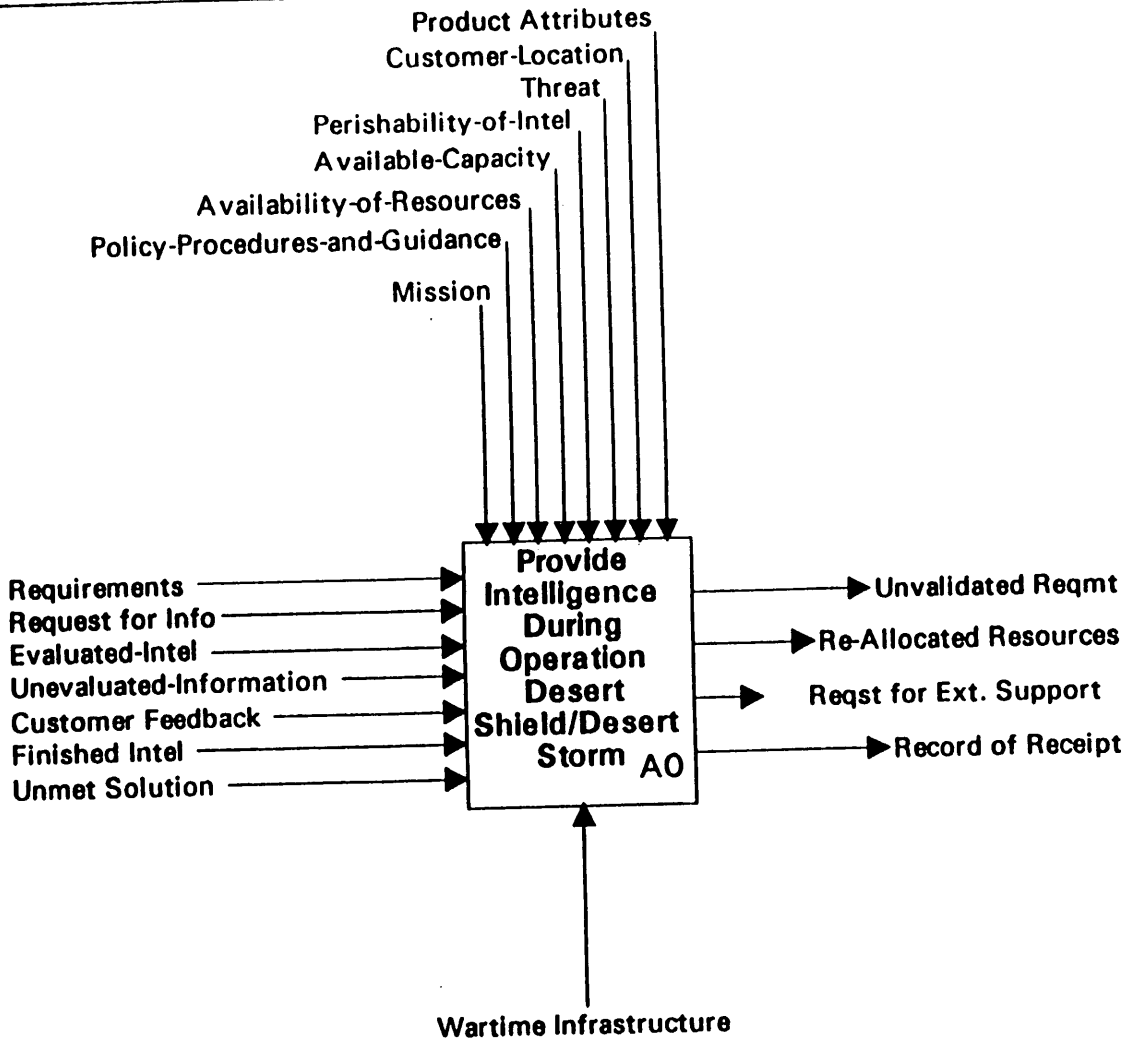

UNCLASSIFIED

NODE:	TITLE:	VIEWPOINT:
	Provide Intelligence During Operation rt Storm/Desert Shield (U)	Defense Intelligenc mmunity

ELECTRONIC FILE NAME:	AUTHOR: IPSG Working Group	NEW DATE: 04/23/92	X	WORKING	READER DATE	CONTEXT:
130216AO.IDD	PROJECT: IPSG	REV DATE: 04/13/92		DRAFT		
	NOTES: 1 2 3 4 5 6 7 8 9 10	REV NO: #9 time: 10:45am		RECOMMENDED		
				PUBLICATION		

UNCLASSIFIED

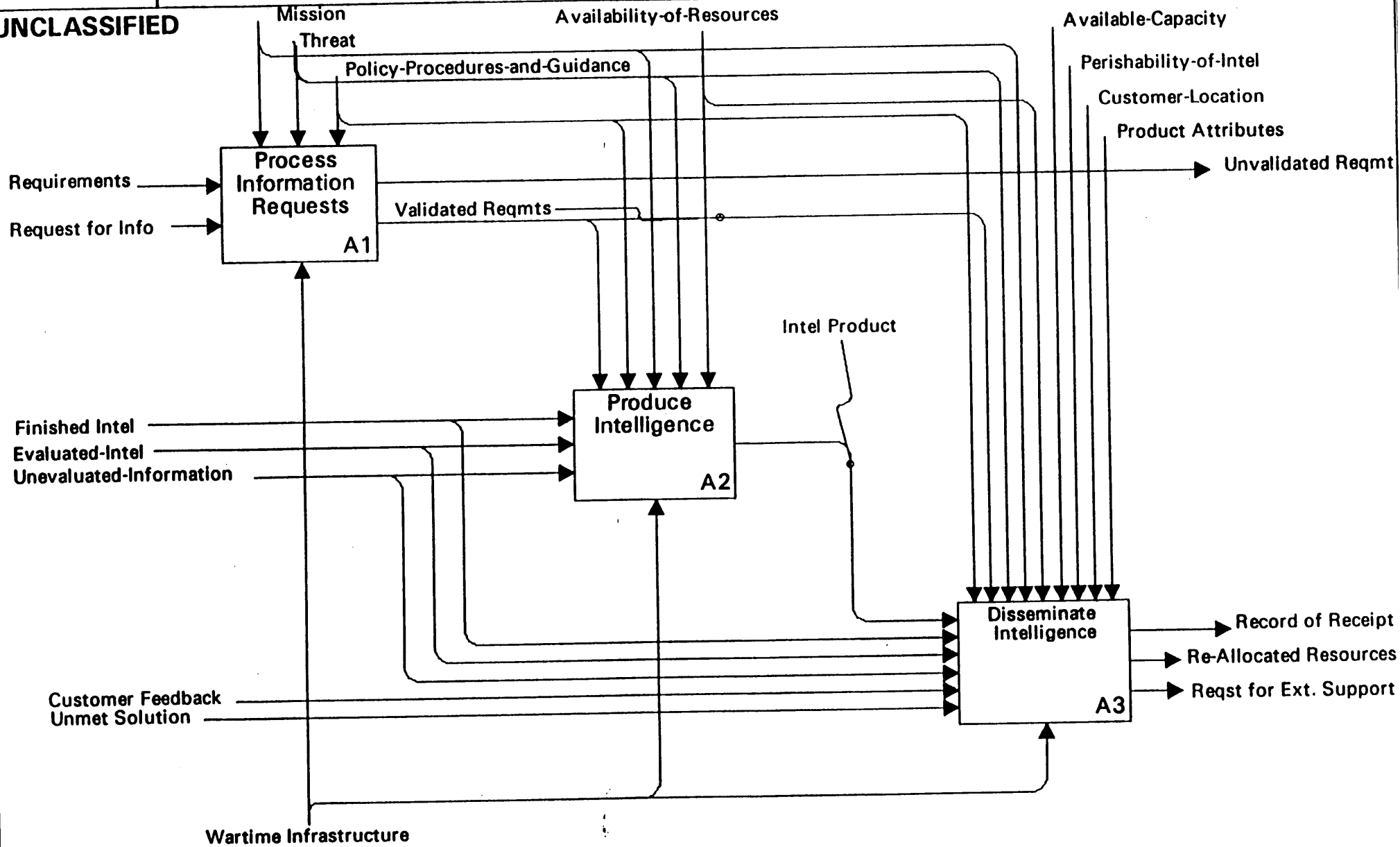

UNCLASSIFIED

NODE:	TITLE:	VIEWPOINT:
A0	Provide Intelligence During Operation Desert Storm/Desert Shield (U)	Defense Intelligence Community

ELECTRONIC FILE NAME:	AUTHOR: IPSG Working Group	NEW DATE: 04/23/92	X	WORKING	READER DATE	CONTEXT:
130216AO.IDD	PROJECT: IPSG	REV DATE: 04/13/92		DRAFT		
	NOTES: 1 2 3 4 5 6 7 8 9 10	REV NO: #9 time: 10:45am		RECOMMENDED		
				PUBLICATION		

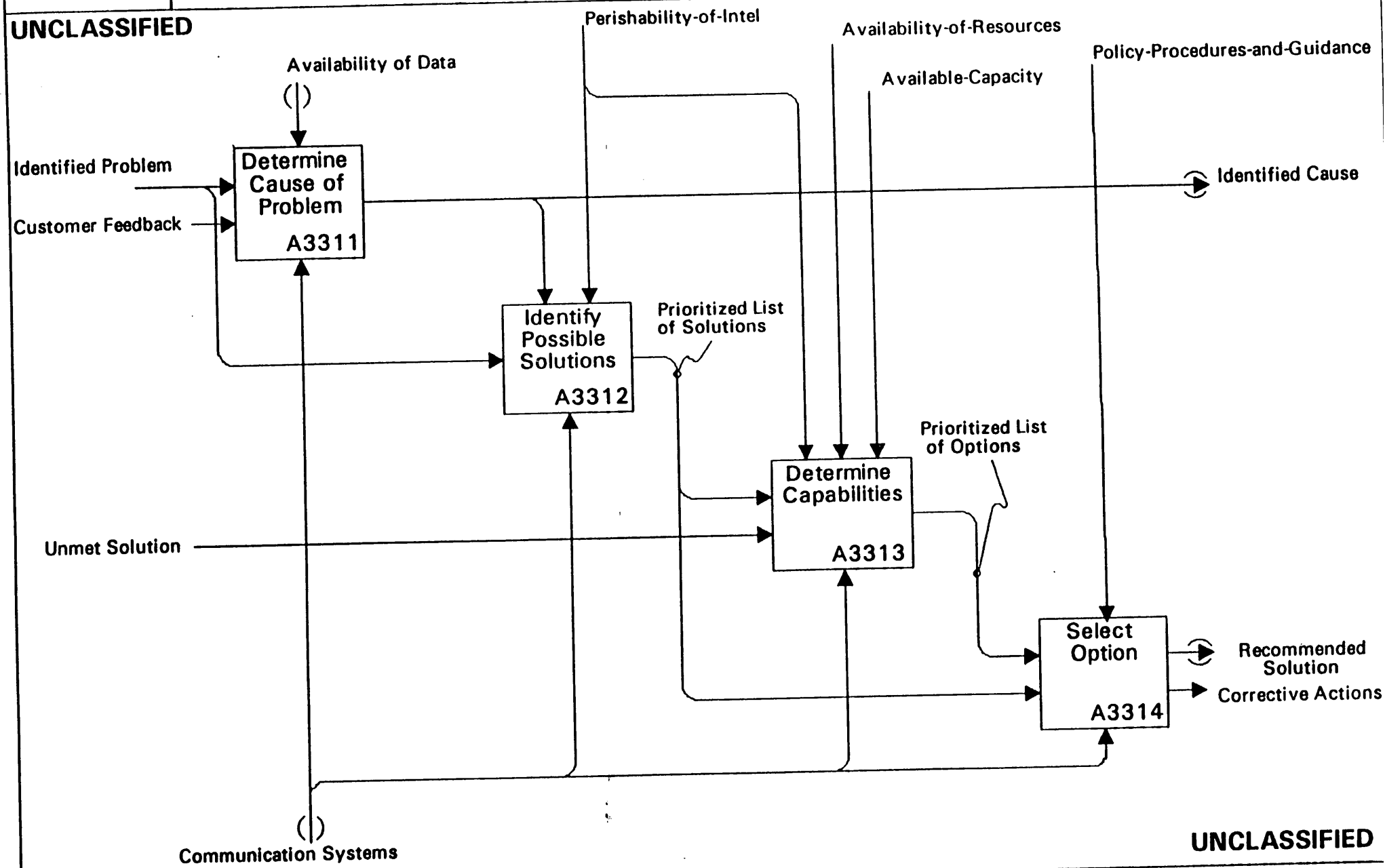

NODE: A331	TITLE: Solve Dissemination/Dis tion Problems	VIEWPOINT: Defense Intellig Community

ELECTRONIC FILE NAME: 130216AO.IDD	AUTHOR: IPSG Working Group PROJECT: IPSG NOTES: 1 2 3 4 5 6 7 8 9 10	NEW DATE: 04/23/92 REV DATE: 04/13/92 REV NO: #9 time: 10:45am	X	WORKING	READER	CONTEXT:
				DRAFT		
				RECOMMENDED		
				PUBLICATION		

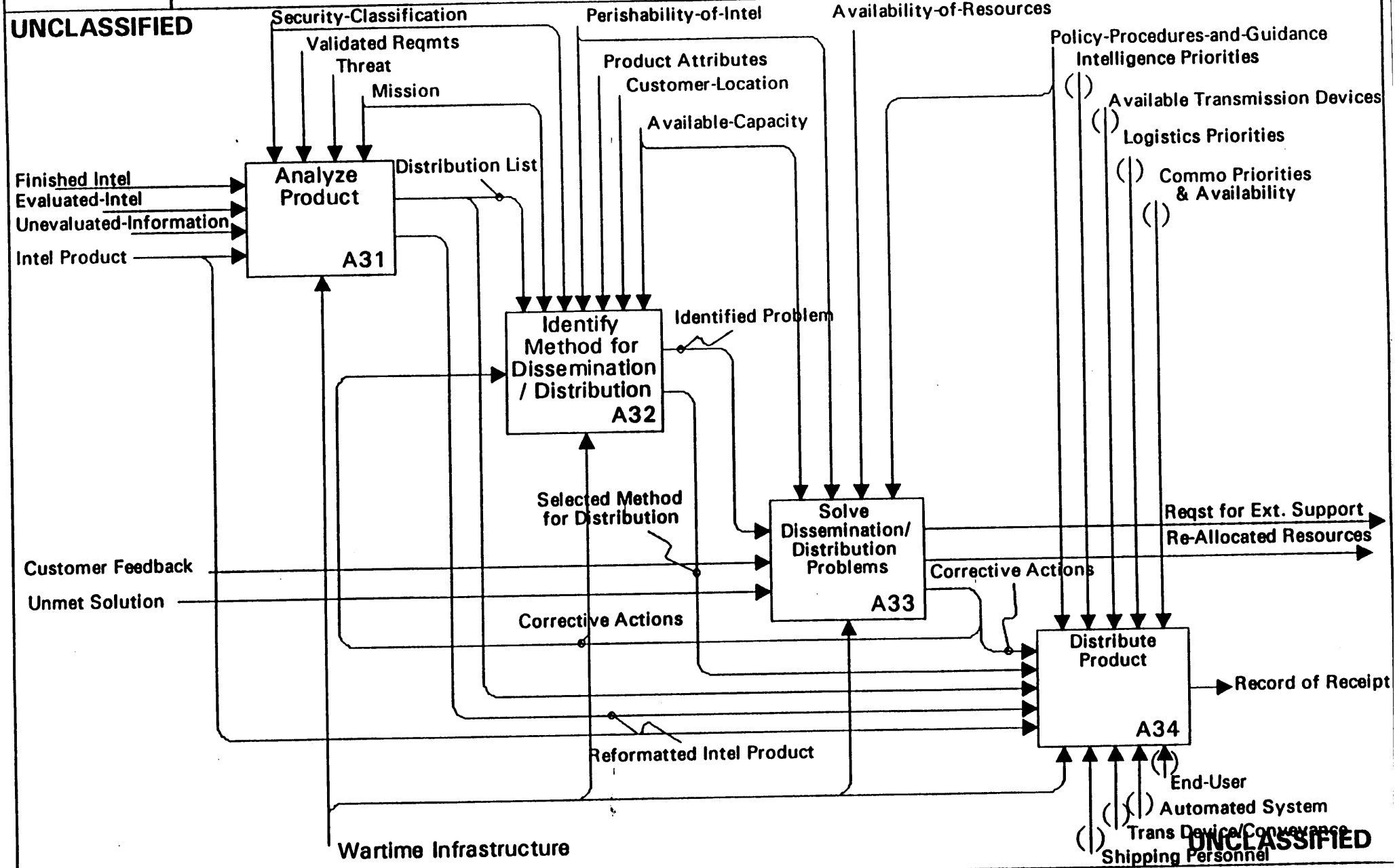

NODE: A3	TITLE: Disseminate Intelligence (U)	VIEWPOINT: Defense Intelligence Community

ELECT NIC FILE N..ME: 130216AO.IDD	AUTHOR: IPSG Working Group PROJECT: IPSG NOTES: 1 2 3 4 5 6 7 8 9 10	NEW D/ :04/23/92 REV DATE: 04/13/92 REV NO: #9 time: 10:45am	X	WORKING	READER DAT	ONTEXT:
				DRAFT		
				RECOMMENDED		
				PUBLICATION		

UNCLASSIFIED

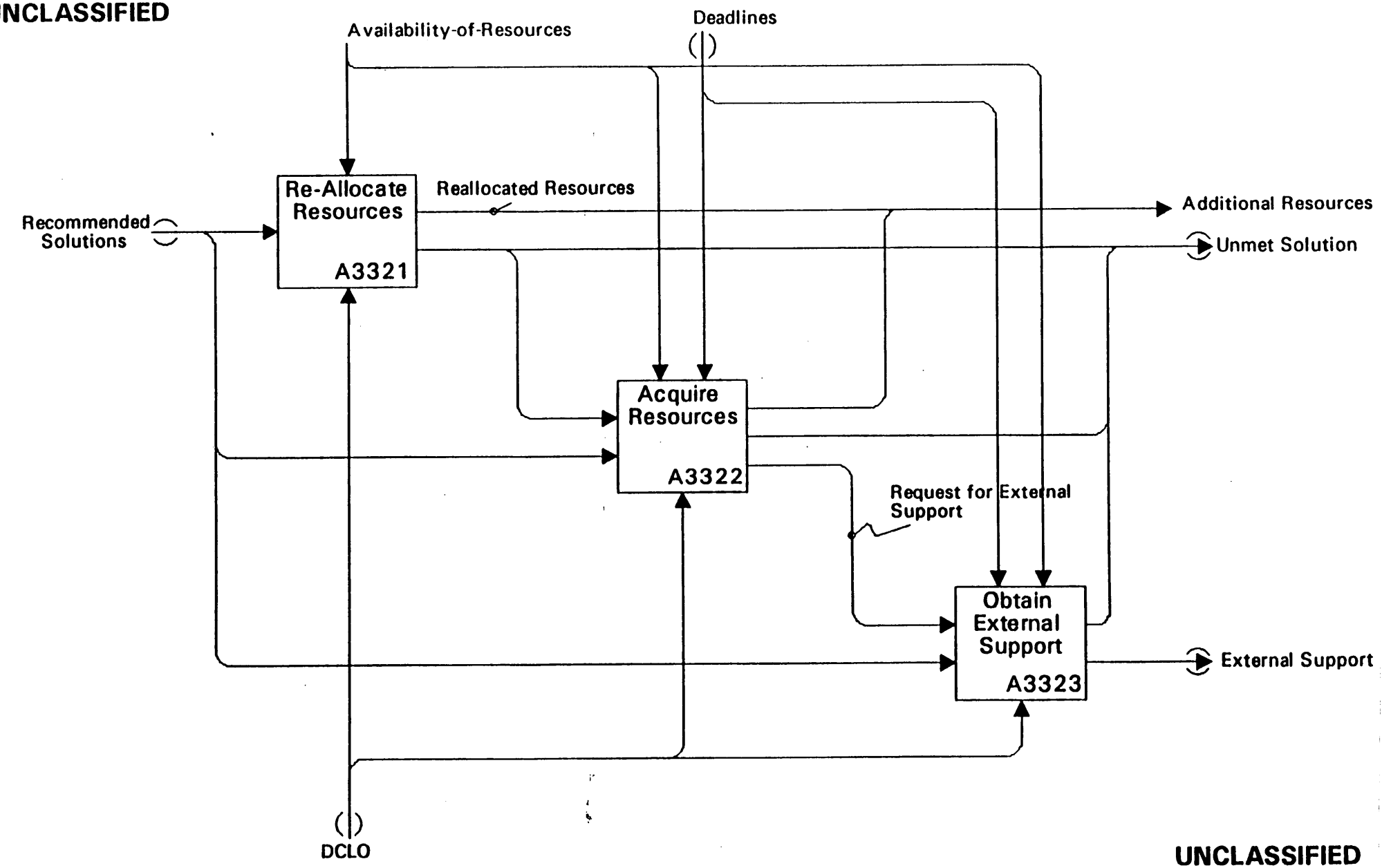

UNCLASSIFIED

NODE: 332	TITLE: Solve Dissemination/Distri on Problems (U)	VIEWPOINT: Defense Intellige Community

ELECTRONIC FILE NAME: 130216AO.IDD	AUTHOR: IPSG Working Group PROJECT: IPSG NOTES: 1 2 3 4 5 6 7 8 9 10	NEW DATE: 04/23/92 REV DATE: 04/13/92 REV NO: #9 time: 10:45am	X	WORKING	READER DATE	CONTEXT:
				DRAFT		
				RECOMMENDED		
				PUBLICATION		

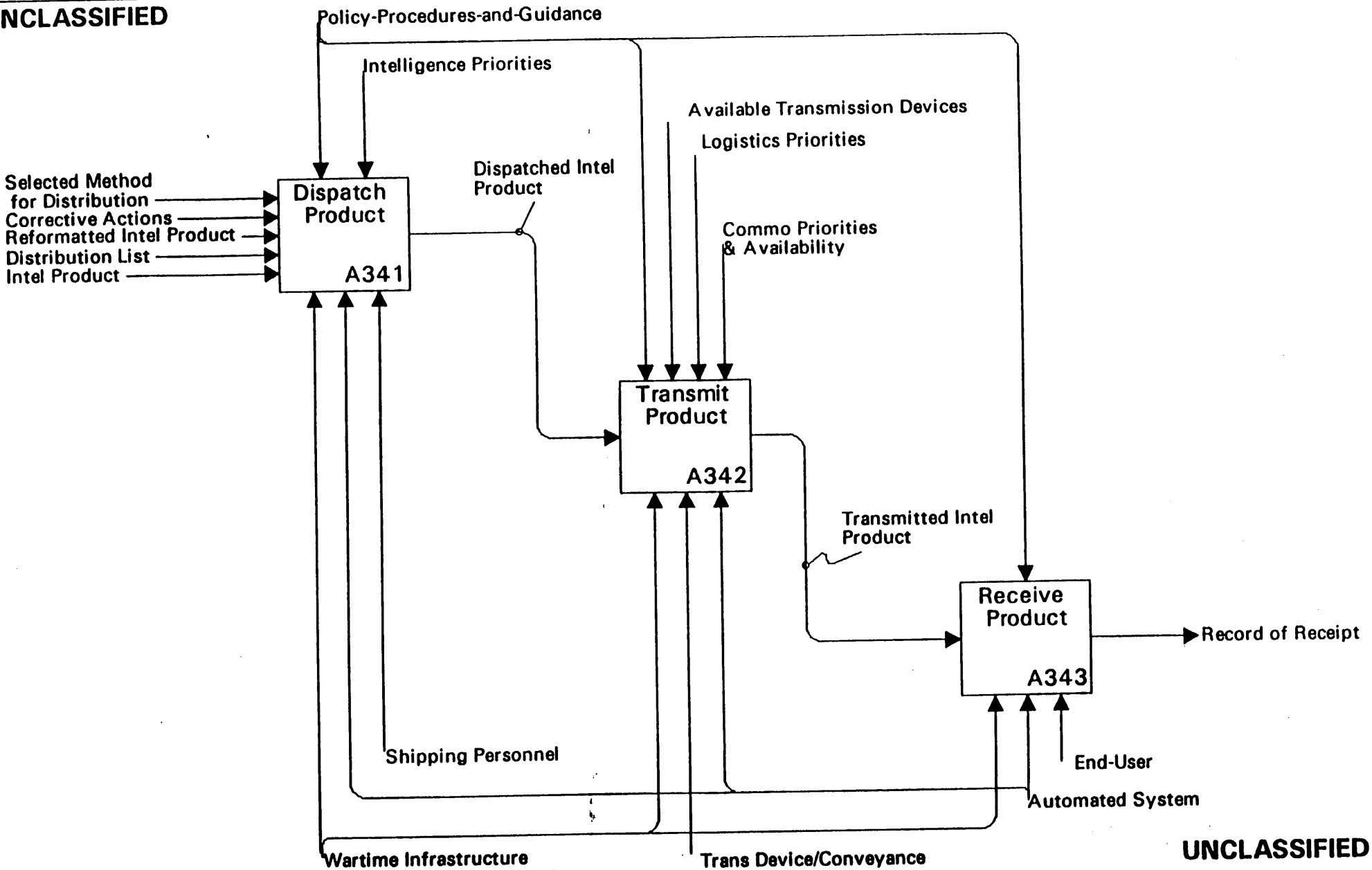

NODE: A34	TITLE: Distribute Product (U)	VIEWPOINT: Defense Intelligence Community

DEFENSE INTELLIGENCE COMMUNITY
Provide Intelligence During Operation Desert Shield/Desert Storm (U)
FINAL DICTIONARY REPORT

Reference Report for: 130216A0.IDD

(U)Acquire Resources
Record Type: Activity
Record Name: 3/A3322
Definition = Acquiring resources is the activity which results from processing recommended solutions or not being able to re-allocate resources and requires either the acquisition of additional resources or a request for external support for procurement of additional resources. Usually under the control mechanisms of availability of resources and deadlines.
Creation Date = 3/9/92

(U)Additional Resources
Record Type: Output
Record Name: Additional Resources
Definition = Those additional means of support (e.g., personnel, communications, transportation, ADP systems) which are obtained and have modified the existing support infrastructure to allow implementation of a solution to a dissemination problem.
Creation Date = 3/12/92

(U)Analyze Product
Record Type: Activity
Record Name: 3/A31
Definition = Based on stated requirements from customers, allocate finished intelligence to the respective customers which satisfies the stated requirements.
Creation Date = 3/4/92

(U)Available Capacity
Record Type: Control
Record Name: Available Capacity
Definition = The maximum capability of communication lines to receive, hold and transmit information.

(U)Availability of Data
Record Type: Control
Record Name: Availability of Data
Definition = That information which is not readily available to determine the cause of a dissemination problem.

(U)Availability-of-Resources
Record Type: Control
Record Name: Availability of Resources
Definition = Assets available for transportation/transmission of product.
Creation Date = 3/5/92

(U) Available Transmission Devices
Record Type: Control
Record Name: Available Transmission Devices
Definition = Means available to transmit/transport products, (e.g. communication lines, mail facilities.,etc.)
Creation Date = 3/6/92

(U)Customer-Location
Record Type: Control
Record Name: Customer location
Definition = The actual geographic location at which a customer is located to which intelligence is to be distributed.
Creation Date = 3/5/92

(U)Customer Feedback
Record Type: Input
Record Name: Customer Feedback
Definition = Communication from the customer as to the result of some action, or inaction such as the receipt or non-receipt of the product.
Creation Date = 3/5/92

(U)Communication Priorities & Availability
Record Type: Control
Record Name: Communication Priorities and Availabilities
Definition = Limitations imposed on communication lines to move data.
Creation Date = 3/6/92

(U)Corrective Actions
Record Type: Output/Input
Record Name: Corrective Actions
Definition = Procedures or guidance set forth to rectify a dissemination problem.

(U)Communication Systems
Record Type: Mechanism
Record Name: Communication Systems
Definition = Those means (phone, fax, communication lines, etc.) which enable solving a dissemination/distribution problem.

(U)Deadlines
Record Type: Control
Record Name: Deadlines
Definition = Those time constraints caused by the perishability of the intelligence and the time sensitivity of a consumer need which acts as a control on an organization attempting to re-allocate or acquire resources or obtain external support in order to attempt to implement a solution to a dissemination problem.
Creation Date = 3/09/92

(U)Determine Cause of Problem
Record Type: Activity
Record Name: 3/A3311
Definition = Analyze a problem and identify why it exists.
Creation Date = 3/9/92

(U)Determine Capabilities
Record Type: Activity
Record Name: 3/A3313
Definition = Analyze existing means available to solve a designated problem.
Creation Date = 3/9/92

(U) Distribution List
Record Type = Output/Input
Record Name = Distribution List
Definition = A list of intelligence customers determined by a comparison of an intelligence product's subject and geographic content and classification with standing or ad hoc customer requirements for intelligence.

(U)Dispatched Intel Product
Record Type: Output/Input
Record Name: Dispatched Intel Product
Definition = Once the intelligence product is matched up with the final distribution list and a method selected for dissemination, it is prepared (packaged, receipted, typed, etc.) and sent/released into the distribution system.
Creation Date = 3/12/92

(U)Disseminate Intelligence
Record Type: Activity
Record Name: 3/A3
Definition = Identify customers to receive products. Identify method for dissemination. Identify transportation mode. Distribute product.
Creation Date = 3/12/92

(U)Distribute Product
Record Type: Activity
Record Name: 3/A34
Definition = Based on the distribution list and selected dissemination method, send product(s) to consumer.
Creation Date = 3/12/92

(U)End-User
Record Type: Mechanism
Record Name: End User
Definition = The last person in the user chain to actually require, receive, and use the intelligence product.
Creation Date = 3/12/92

(U)Evaluated-Intel
Record Type: Input
Record Name: Evaluated Intel
Definition = Information that has been partially analyzed.
Creation Date = 3/5/92

(U)External Support
Record Type: Output
Record Name: External Support
Definition = That additional assistance obtained from outside organizations which modifies the existing support infrastructure to allow implementation of a solution to a dissemination problem.
Creation Date = 3/09/92

(U)Finished Intelligence
Record Type: Input
Record Name: Finished Intelligence
Definition = Information that has been fully analyzed.
Creation Date = 3/5/92

(U)Identified Cause
Record Type: Output/Control
Record Name: Identified Cause
Definition = The determined reason why a problem exists.
Creation Date = 3/9/92

(U)Identify Possible Solutions
Record Type: Activity
Record Name: 3/A3312
Definition = Discovering all possible solutions to a problem.
Creation Date = 3/12/92

(U) Identify Method for Dissemination/ Distribution
Record Type: Activity
Record Name: 3/A32
Definition = Ascertain the most appropriate means to deliver a product (air or sea).
Creation Date = 3/12/92

(U)Identified Problem
Record Type: Output/Input
Record Name: Identified Problem
Definition = The inability to identify a satisfactory method to disseminate /distribute an intelligence product.

(U)Intelligence Priorities
Record Type: Control
Record Name: Intelligence Priorities
Definition = A rank order of importance of intelligence information.
Creation Date = 3/12/92

(U)Intelligence Product
Record Type: Output/Input
Record Name: Intelligence Product
Definition = Information which has been analyzed and compared with all available information from all sources. Finished intelligence is representative of the best available information at the time of the intelligence cut-off date (ICOD).
Creation Date = 3/5/92

(U)Logistics Priorities
Record Type: Control
Record Name: Logistics Priorities
Definition = A rank order of importance of organizations, personnel, equipment, communications, and infrastructure support for scheduled delivery to a specified location. (Note: acts as a constraint on intelligence dissemination).
Creation Date = 3/12/92

(U)Mission
Record Type: Control
Record Name: Mission
Definition = The prime directive controlling the functions and structure of an organization. (Note: Usually acts as a control mechanism on an activity).
Creation Date = 3/12/92

(U)Obtain External Support
Record Type: Activity
Record Name: 3/A3323
Definition = The coordination and request process done by a organization to get assistance from other organizations in order to modify the existing support infrastructure.
Creation Date = 3/12/92

(U)Perishability-of-Intelligence
Record Type: Control
Record Name: Perishability of Intelligence
Definition = That period of time during which an intelligence product is still useful.
Creation Date = 3/12/92

(U)Policy-Procedures-and Guidance
Record Type: Control
Record Name: Policy, Procedures and Guidance
Definition = Agreements, generally in the form of formal documents, governing the means by which an organization carries out its mission. (Usually acts as a control mechanism on an activity).
Creation Date = 3/12/92

(U)Prioritized List of Options
Record Type: Output/Input
Record Name: Prioritized List of Options
Definition = A rank order of possible problem solutions.
Creation Date = 3/12/92

(U)Process Information Requests
Record Type: Activity
Record Name: 3/A1
Definition = The transformation of requirements and requests for information into either validated requirements approved for tasking or unvalidated requirements requiring no further action.
Creation Date = 3/12/92

(U) Prioritized List of Solutions
Record Type: Output/Input
Record Name: Prioritized List of Solutions
Definition = A rank order of actions required to solve a problem.
Creation Date = 3/12/92

(U)Produce Intelligence
Record Type: Activity
Record Name: 3/A2
Definition = That portion of the intelligence cycle which includes collecting, exploiting, analyzing, and producing a finished intelligence product.
Creation Date = 3/12/92

(U)Product Attributes
Record Type: Control
Record Name: Product Attributes
Definition = The inherent qualities of a product which often dictate how a product can be disseminated (size, weight, number of pages, material, and media) .
Creation Date = 3/13/92

(U)Re-Allocate Resources
Record Type: Activity
Record Name: 3/A3321
Definition = The realignment of resources (e.g., people, equipment, funds to correct a dissemination problem)
Creation Date = 3/12/92

(U)Recommended Solution
Record Type: Output
Record Name: Recommended Solution
Definition = The action suggested to solve the problem.

(U)Record of Receipt
Record Type = Output
Record Name: Record of Receipt
Definition = When the intelligence product is received by each successive end user it is signed and accounted for in accordance with established policies, procedures, and guidance.

(U)Re-Allocated Resources
Record Type: Output
Record Name: Re-Allocated Resources
Definition = Those additional means of support (e.g., personnel, communications, transportation, ADP systems) which are obtained and have modified the existing support infrastructure to allow implementation of a solution to a dissemination problem.
Creation Date = 3/12/92

(U)Reformatted Intel Product
Record Type: Output
Record Name: Reformatted Product
Definition = Output of intelligence production activity that changes the material's size, classification, or media.
Creation Date = 3/5/92

(U)Request for Information
Record Type: Input
Record Name: Request for Information
Definition = A specific need that is required but not covered by known requirements.
Creation Date = 3/5/92

(U)Request for External Support
Record Type: Output
Record Name: Request for External Support
Definition = Request for assistance/assets outside your area of control.
Creation Date = 3/6/92

(U)Requirements
Record Type: Input
Record Name: Requirements
Definition = Intelligence needs derived from mission statements and CONPLANS. Includes requests for specific products which have been produced or requests to produce one or more different products.
Creation Date = 3/12/92

(U)Security-Classification
Record Type: Control
Record Name: Security Classification
Definition = A designation on a document, message, or other product which indicates item is available to authorized persons only. The designation is meant to prevent item or information from being disclosed to unauthorized persons or to protect the source of the information.
Creation Date = 3/12/92

(U)Select Option
Record Type: Activity
Record Name: 3/A3314
Definition = That solution chosen to correct a dissemination problem.
Creation Date = 3/12/92

(U)Selected Method for Distribution
Record Type: Output/Input
Record Name: Selected Method for Distribution
Definition = The method chosen for transmission/transportation of a product.
Creation Date = 3/12/92

(U)Shipping Personnel
Record Type: Mechanism
Record Name: Shipping Personnel
Definition = Those individuals responsible for packaging and transmitting intelligence products.
Creation Date = 3/12/92

(U)Solve Dissemination/ Distribution Problems
Record Type: Activity
Record Name: 3/A33
Definition = The process of identifying solutions and their means of implementation to correct a dissemination problem.
Creation Date = 3/12/92

(U)Threat
Record Type: Control
Record Name: Threat
Definition = Danger posed by an enemy.
Creation Date = 3/12/92

(U)Trans Device/Conveyance
Record Type: Mechanism
Record Name: Trans Device/Conveyance
Definition = Those means which transmit an intelligence product, usually communication lines.

(U)Transmitted Intel Product
Record Type: Control
Record Name: Transmitted Intel Product
Definition = An intelligence product sent to a consumer, either by electrical transmissions (comms) or hand-carried (courier) delivery.
Creation Date = 3/12/92

(U)Unevaluated-Information
Record Type: Output
Record Name: Unevaluated Info
Definition = That information which has not been analyzed.
Creation Date = 3/12/92

(U)Unmet Solutions
Record Type: Input/Output
Record Name: Unmet Solutions
Definition = The inability to re-allocate resources in order to solve a dissemination problem.

(U)Unvalidated Reqmt
Record Type: Input
Record Name: Unvalidated Reqmts
Definition = A disapproval request for either a product or production.
Creation Date = 3/12/92

(U)Validated Reqmts
Record Type: Output/Control
Record Name: Validated Reqmts
Definition = An approval request for either a product or for production of a product.
Creation Date = 3/12/92

(U)Wartime Infrastructure
Record Type: Mechanism
Record Name: Wartime Infrastructure
Definition = The resources available to disseminate intelligence. Includes logistic and communications personnel, equipment and funding resources, and their interrelationships.

CENTCOM SCENARIO
Disseminate GRG from CENTCOM to MAJCOM, COAL Forces, and Internal CENTCOM (Late January) (U)

"B" Diagrams

(U) The hard copy distribution scenario described took place between 1 Jan 91 - 1 Apr 91 in support of Operation Desert Shield/Desert Storm. The activities occurred prior to hostilities, during the bombing campaign, ground campaign and post hostilities phases.

(U) The activities took place at "make-shift" facilities located at airport facilities in Saudi Arabia and Bahrain. The theater distribution office was physically located at the Joint Imagery Processing Complex (JIPC) at the military airport in Riyadh, Saudi Arabia.

(U) In that distribution had not been programmed, there was an initial lack of personnel, equipment and transport. Aggressive pursuit of these commodities resulted in a working distribution system from headquarters to the component and corps levels.

(U) In the three-month period between 1 Jan 91 - 1 Apr 91, 34 tons of classified material were distributed, or approximately 11 tons per month.

ELECTR C FILE NAME: 130216B1.IDD	AUTHOR: IPSG Working Group PROJECT: IPSG NOTES: 1 2 3 4 5 6 7 8 9 10	NEW DAT 1/23/92 REV DATE: 4/16/92 REV NO: #5 10:45	X	WORKING	READER DATE	CONTEXT:
				DRAFT		
				RECOMMENDED		
				PUBLICATION		

UNCLASSIFIED

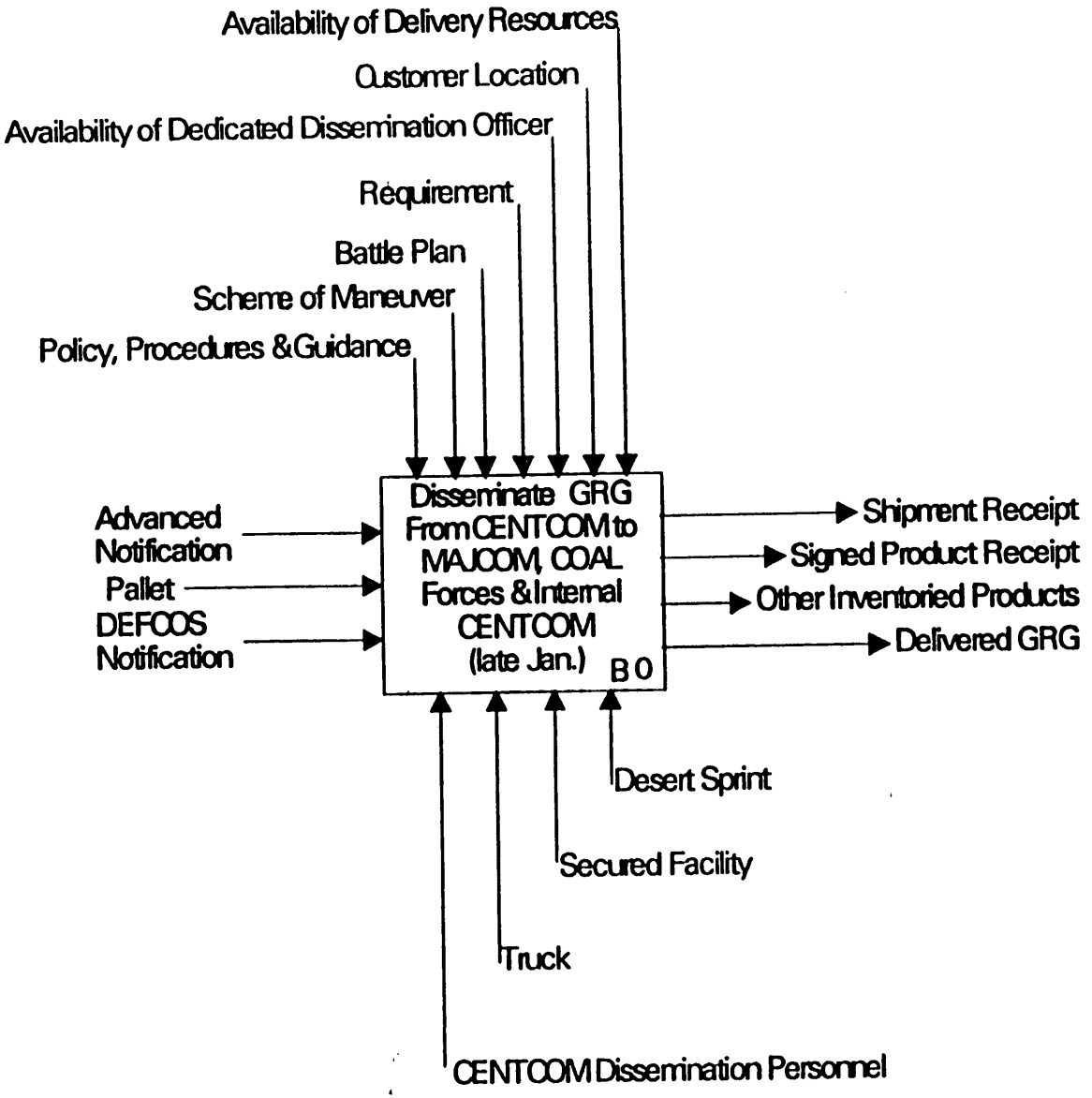

UNCLASSIFIED

NODE:	TITLE: Disseminate GRG From CENTCOM to MAJCOM, COAL Forces, and Internal CENTCOM (late J ry) (U)	VIEWPOINT: CENTCOM

ELECTRONIC FILE NAME: 130216B1.IDD	AUTHOR: IPSG Working Group PROJECT: IPSG NOTES: 1 2 3 4 5 6 7 8 9 10	NEW DATE: V23/92 REV DATE: 4/16/92 REV NO: #5 10:45	X	WORKING	READER DAT	CONTEXT:
				DRAFT		
				RECOMMENDED		
				PUBLICATION		

UNCLASSIFIED

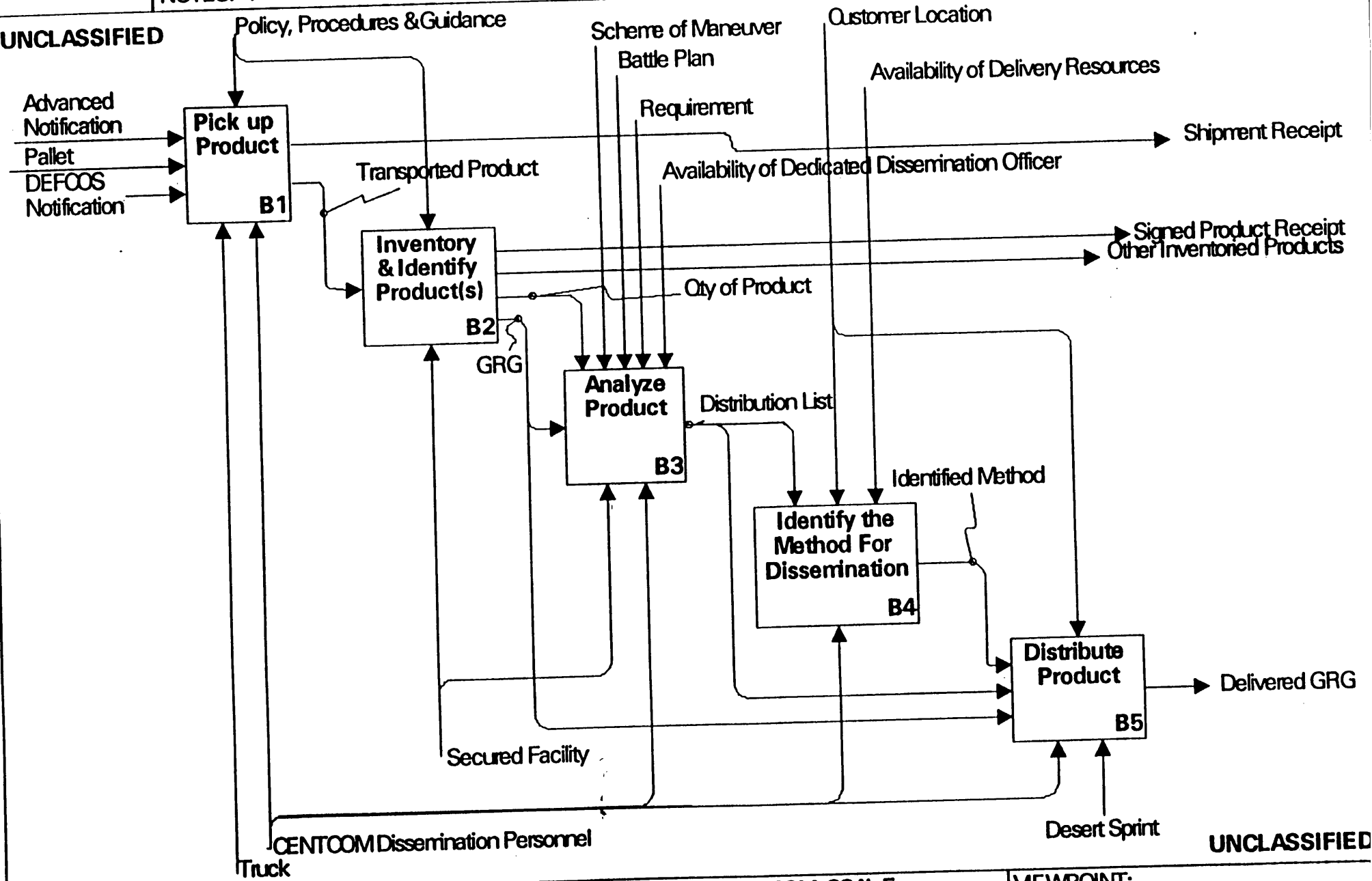

UNCLASSIFIED

NODE: B0	TITLE: Disseminate GRG From CENTCOM to MAJCOM, COAL Forces, and Internal CENTCOM (late January) (U)	VIEWPOINT: CENTCOM

ELECTR C FILE NAME: 130216BG.IDD	AUTHOR: IPSG Working Group PROJECT: IPSG NOTES: 1 2 3 4 5 6 7 8 9 10	NEW DAT /23/92 REV DATE: 4/16/92 REV NO: #4	X	WORKING	READER DATI	ONTEXT:
				DRAFT		
				RECOMMENDED		
				PUBLICATION		

UNCLASSIFIED

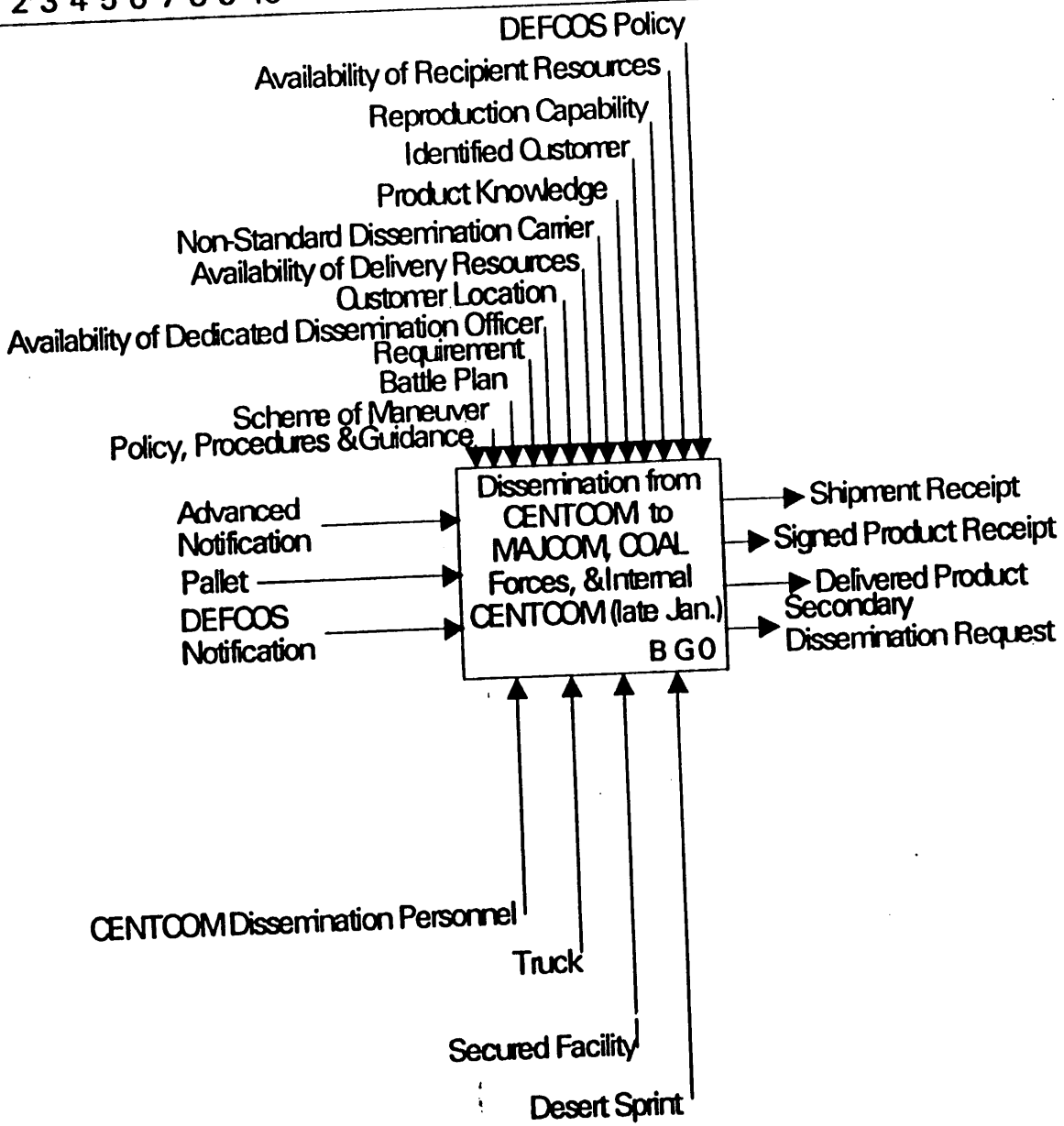

UNCLASSIFIED

NODE: 0	TITLE: Dissemination from CENTCOM to MAJCOM, COAL Forces, and Internal CENTCOM (late Janua... Generic (U)	VIEWPOINT: CENTCOM

ELECTF C FILE NAME: 130216BG.IDD	AUTHOR: IPSG Working Group PROJECT: IPSG NOTES: 1 2 3 4 5 6 7 8 9 10	NEW DA Y/23/92 REV DATE: 4/16/92 REV NO: #4	X	WORKING	READER DAT:
				DRAFT	
				RECOMMENDED	
				PUBLICATION	

CONTEXT:

UNCLASSIFIED

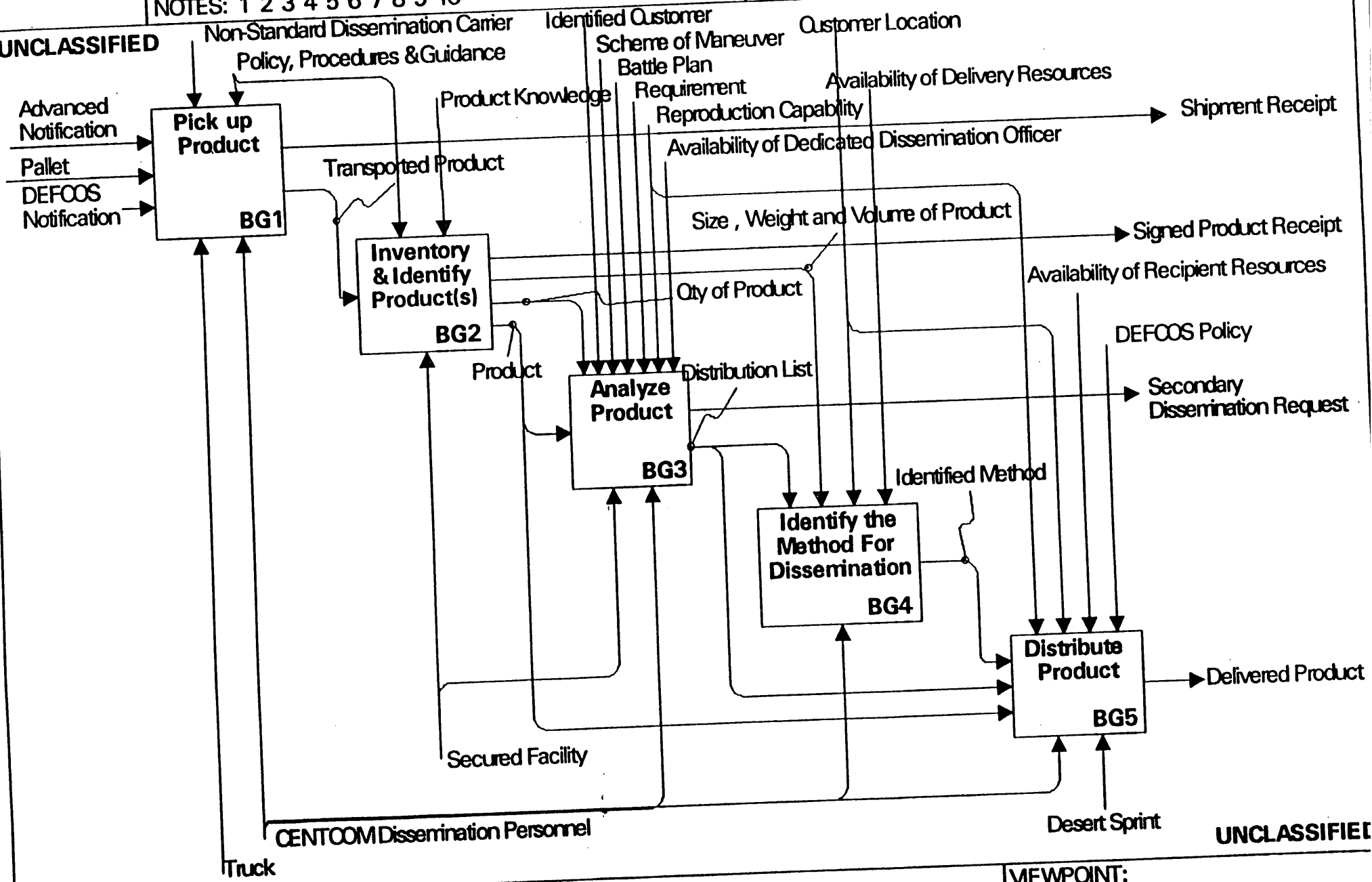

UNCLASSIFIED

NODE: BG0	TITLE: Dissemination from CENTCOM to MAJCOM, COAL Forces, and Internal CENTCOM (late January)- Generic (U)	VIEWPOINT: CENTCOM

CENTCOM
Disseminate GRG from CENTCOM to MAJCOM, COAL Forces, and Internal CENTCOM (Late January)
FINAL DICTIONARY REPORT (U)

Reference Report for: 130216B1.IDD &
130216BG.IDD

(U)Advanced Notification
Record Type: Input
Record Name: Advanced Notification
Definition = Notification from DIA or another producer that a product is being shipped. Notification normally identifies product, date and method of shipment, expected date of arrival and other tracking data as appropriate (e.g. AC number, package number).
Creation Date = 3/20/92

(U)Analyze Product
Record Type: Activity
Record Name: 3/B3
Definition = A process wherein all the products in a shipment (pallet) are opened, inventoried, and sorted by product type. Product quantity is determined and then, based on battle plan, quantity on hand, and need of components, distribution method is determined.
Creation Date = 3/20/92

(U)Availability of Dedicated Dissemination Officer
Record Type: Control
Record Name: Availability of Dedicated Dissemination Officer
Definition = CENTCOM did not have a "dedicated" dissemination officer. The dissemination function was a collateral duty of the RFI manager. If the dissemination officer was not immediately available because of RFI duties, the "analyze product" portion of dissemination was delayed.
Creation Date = 3/19/92

(U) Availability of Delivery Resources
Record Type: Control
Record Name: Availability of Delivery Resources
Definition = Access to aircraft, truck, or ship as appropriate in order to transport (disseminate) product.
Creation Date = 3/19/92

(U)Availability of Recipient Resources
Record Type: Control
Record Name: Availability of Recipient Resources
Definition = The capability of the customer to receive a product. Usually acts as a control mechanism on the product distribution activity.
Creation Date = 3/12/92

(U)Battle Plan
Record Type: Contol
Record Name: Battle Plan
Definition = The overall plan by which one will execute the war. Includes friendly units planned to engage enemy forces.
Creation Date = 3/19/92

(U)CENTCOM Dissemination Personnel
Record Type: Mechanism
Record Name: CENTCOM Dissemination Personnel
Definition = Personnel assigned (presently or temporarily) to the USCENTCOM J-2 Dissemination Branch.
Creation Date = 3/20/92

(U)Customer Location
Record Type: Control
Record Name: Customer Location
Definition = Site to which material had to be shipped to reach consumer.
Creation Date = 3/19/92

(U)DEFCOS Notification
Record Type: Input
Record Name: DEFCOS Notification
Definition = Notification from Defense Courier Service that classified material had arrived at their location and was available for pickup.
Creation Date = 3/20/92

(U)Delivered GRG
Record Type: Output
Record Name: Delivered GRG
Definition = A gridded reference graphic in the hands of the consumer.
Creation Date = 3/20/92

(U)Desert Sprint
Record Type: Mechanism
Record Name: Desert Sprint
Definition = Code name for CENTCOM delivery sources in the Desert Storm Theater.
Creation Date = 3/20/92

(U)Distribute Product
Record Type: Activity
Record Name: 4/B5
Definition = Ship product via air, ground,etc.to customer.
Creation Date = 3/20/92

(U)Distribution List
Record Type: Output/Control/Input
Record Name: Distribution List
Definition = List written after product shipment was inventoried, identified and analyzed to determine who would get what products and in what quantity.
Creation Date = 3/20/92

(U)GRG
Record Type: Output/Input
Record Name: GRG
Definition = Gridded Reference Graphic. A picture of an area with a grid overlay.
Creation Date = 3/20/92

(U)Identified Customer
Record Type: Control
Record Name: Identified Customer
Definition = Specific identification of the organization and individual to receive a product. Usually acts as a control mechanism in the product analysis activity.
Creation Date = 3/12/92

(U)Identified Method
Record Type: Output/Input
Record Name: Identify Method
Definition = The determination, based on product weight/volume, distance to be transported, time constraints of the shipment, and availability of transport sources, as to what type of transport would be used to ship product.
Creation Date = 3/20/92

(U)Identify the Method For Dissemination
Record Type: Activity
Record Name: 4/B4
Definition = Based on customer location and delivery resources, determine optimum transport method.
Creation Date = 3/20/92

(U)Inventory & Identify Product(s)
Record Type: Activity
Record Name: 4/B2
Definition = Process wherein shipment is opened up to discover quantity and type of products received.
Creation Date = 3/20/92

(U)Other Inventoried Products
Record Type: Output
Record Name: Other Inventoried Products
Definition = High priority material shipped with classified products that were not destined for further shipment to components/corps. (e.g., film stock, NMIST parts, etc.)
Creation Date = 3/20/92

(U)Pallet
Record Type: Input
Record Name: Pallet
Definition = A portable platform for handling or moving materials and packages. Platform on which classified materials were loaded and shipped to the CENTCOM dissemination location.
Creation Date = 3/20/92

(U)Pick up Product
Record Type: Activity
Record Name: 4/B1
Definition = That part of the dissemination cycle wherein CENTCOM personnel physically obtained custody of shipment from DEFCOS.
Creation Date = 3/20/92

(U)Policy, Procedures & Guidance
Record Type: Control
Record Name: Policy, Procedures & Guidance
Definition = Standard operating procedures. Picking up a product from DEFCOS requires two people who have been pre-identified on DEFCOS Form 10. The following procedures take place at the dissemination office: the product is identified, counted, receipted, sorted by type and quantity, and then wrapped and packed for shipment to component/corps.
Creation Date = 3/20/92

(U)Product Knowledge
Record Type: Control
Record Name: Product Knowledge
Definition = Having sufficient understanding of a product.
Creation Date = 3/12/92

(U)Qty of Product
Record Type: Ouput/Control
Record Name: Quantity of Product
Definition = Physical count of each product. Count necessary to provide equitable distribution to consumers.
Creation Date = 3/19/92

(U)Reproduction Capability
Record Type: Control
Record Name: Reproduction Capability
Definition = The ability to increase the number of copies of a product for distribution.
Creation Date = 3/12/92

(U)Requirement
Record Type: Control
Record Name: Requirement
Definition = Either a stated need (request) or known need (based on battle plan/scheme of maneuver).
Creation Date = 3/19/92

(U)Scheme of Maneuver
Record Type: Control
Record Name: Scheme of Maneuver
Definition = That subset of the battle plan that details a unit's planned movement in a battle, (i.e., direction, time, speed, forces expected to engage).
Creation Date = 3/20/92

(U)Secondary Dissemination Request
Record Type: Output
Record Name: Secondary Dissemination Request
Definition = In this instance, "secondary dissemination" refers to an agency or organization needing/desiring additional copies of a particular product and requesting thru the requirements/validation chain, that particular product. DIA has a validation role here and the originating unit/organizations are responsible to provide the items to the requestor.
Creation Date = 3/12/92

(U)Secured Facility
Record Type: Mechanism
Record Name: Secured Facility
Definition = Facility with 24 hour security in which classified material can be processed/handled/stored.
Creation Date = 3/19/92

(U)Shipment Receipt
Record Type: Output
Record Name: Shipment Receipt
Definition = Receipt that required signature and return to shipper to verify shipment received.
Creation Date = 3/19/92

(U)Signed Product Receipt
Record Type: Output
Record Name: Signed Product Receipt
Definition = Receipt that requires signature and return to product producer to verify receipt of product.
Creation Date = 3/19/92

(U)Size , Weight and Volume of Product
Record Type: Control
Record Name: Size, Weight, and Volume of Product
Definition = Physical attributes of a product and the number of copies in a delivered shipment. These attributes will affect how a product will be transported and distributed. Usually acts as an output from the inventory and product identification activity.
Creation Date = 3/12/92

(U)Transported Product
Record Type: Output/Input
Record Name: Transported Product
Definition = The movement of material from the DEFCOS office to the CENTCOM dissemination office.
Creation Date = 3/20/92

(U)Truck
Record Type: Mechanism
Record Name: Truck
Definition = Land vehicle with large storage/carrying capacity.
Creation Date = 3/19/92

VII CORPS SCENARIO
Disseminate Template from VII Corps to Division (Mid January) (U)

"C" Diagrams

Scenario Background

(U) Scenario CO deals with the dissemination of a template from VII Corps to its major subordinate commands (customers) in the mid-January time-frame. The major subordinate commands included the 1st Infantry Division (M), 1st Armored Division, 3d Armored Division, 1st Cavalry Division, 1st Armored Division (British) , 2d Armored Cavalry Regiment. Other customers included major support and service support elements including 2d COSCOM, 207th MI Brigade, MP Brigade, Signal Brigade, etc.

Working Environment

(U) The Corps main headquarters was located in the desert a couple of kilometers off Tapline Road approximately 2-3 hours driving time from King Khalid Military City (KKMC). The environment was austere with the Corps personnel working out of five-ton expandable vans linked together by ramps. The Sensitive Compartmented Information Facility (SCIF) was a field-accredited SCIF containing about 10 five-ton expandable vans surrounded by triple-strand concertina wire and controlled by military police access guards limiting access to personnel with the appropriate clearance and need to know. Dissemination personnel worked 12-hour shifts, seven days a week from November 1990 through May 1991. Dissemination personnel had other responsibilities besides the dissemination of hard copy products, such as templates. This section was responsible for the daily receipt, control, reproduction, and dissemination of electrical messages coming into and going out of the Corps headquarters. Personnel were also levied periodically for unrelated details that kept them from dissemination functions. The Collection Management Section was not authorized any personnel or vehicles to perform a dissemination function. The vehicles had to be borrowed on an ad hoc availability basis. The vehicles used for the receipt of packaged products from higher headquarters were normally tactical vehicles (HUMMV's or CUCV's) available within A Company, 307th MI Battalion, 207th MI Brigade or those commercial vehicles (Land Rovers) allocated to the Corps G2. Our proximity to higher headquarters at ARCENT in Riyadh was about 8-10 hours driving distance by tactical or commercial vehicle. We had electrical connectivity to all major subordinate commands, but this had no impact on the dissemination of hard-copy packaged products.

Major/Minor Shortfalls

(U) The major shortfall to dissemination of intelligence-related hard copy packaged products within VII Corps was the lack of dedicated resources to accomplish the mission in a time by manner when perishability and criticality of the information was important. The Corps G2 Collection Management Section was not authorized the personnel or vehicles to accomplish a courier-type dissemination function to the major subordinate commands. These personnel had to be identified and taken out of hide to accomplish the function. These individuals lacked the training and experience necessary to perform the function in an optimal manner. I assigned a counterintelligence officer (37E) and ELINT and intelligence analysts to the dissemination section and we borrowed vehicles on an ad hoc basis to receive packaged products from higher headquarters. Dissemination of packaged products became the responsibility of our Corps G6 section that had established a daily courier run via helicopter to all the major subordinate commands. Due to the distances involved between all of these commands, vehicle courier runs were not feasible. Therefore, when helicopters were grounded for various reasons (e.g. weather, maintenance, competing priorities), the couriering of packaged products did not occur.

(U) The physical handling and repackaging of packaged products received by VII Corps also required a monumental effort. VII Corps frequently received about 150 pounds of packaged products daily that needed to be inventoried, analyzed in accordance with the battle plan and scheme of maneuver, allocated, controlled, and distributed to the proper customers. This required a tremendous amount of effort and knowledge on the part of the chief of the dissemination section. Packaged products also had to be compared against outstanding requirements in order to properly close-out requirements managed by our requirements section of Collection Management. As a rule, packaged products did not come to the Corps headquarters previously sorted and packaged for distribution to specific units within VII Corps. The rule was that we would get tubes of packaged products (like a hundred copies of a specific overlaid map sheet, series 1:50,000) along with other tubes containing the other map sheets necessary to cover a divisional or corps area of operational and intelligence responsibility and interest. These individual map sheets then had to be manually linked together and repackaged along with control measures, such as product receipts, prepared prior to distribution --a time consuming process.

(U) Finally, the dissemination section needed computer support with database management software to automate the log-in of packaged product received by VII Corps in order to rapidly retrieve information requested by higher and lower headquarters pertaining to the distribution of packaged products. The database could have contained information on the identification of the specific products received, including information cut-off dates, quantities received, quantities distributed, date distributed, and product receipt information. This would have allowed the dissemination section to rapidly build queries and retrieve information that was frequently requested by many organizations within and outside of VII Corps. For example, it could have answered questions, such as "Did we receive the 1:50,000 template of the infantry division dated 15 January 1991? If so, when was it sent to and how many copies did we receive? Without automation, our dissemination personnel would spend hours researching the answers by manually shifting through signed product receipts. This was very inefficient and primarily due to the lack of automation. Generally speaking, the availability of automated support is this is, of course, organization-dependent, and it just happened that the CTOC Support Element within VII Corps was automation poor, about 10 years behind the rest of the Army. We went to Saudi Arabia with just a few microcomputers to service the entire element.

Volume of Packaged Product

(U) VII Corps received about 150 pounds of packaged product daily. The number of electrical messages probably averaged around 200 daily.

ELECTR(; FILE NAME: 130216C1.IDD	AUTHOR: IPSG Working Group PROJECT: IPSG NOTES: 1 2 3 4 5 6 7 8 9 10	NEW DATE '23/92 REV DATE: 4/17/92 REV NO: #4 11 AM	X	WORKING	READER DATE	NTEXT:
				DRAFT		
				RECOMMENDED		
				PUBLICATION		

UNCLASSIFIED

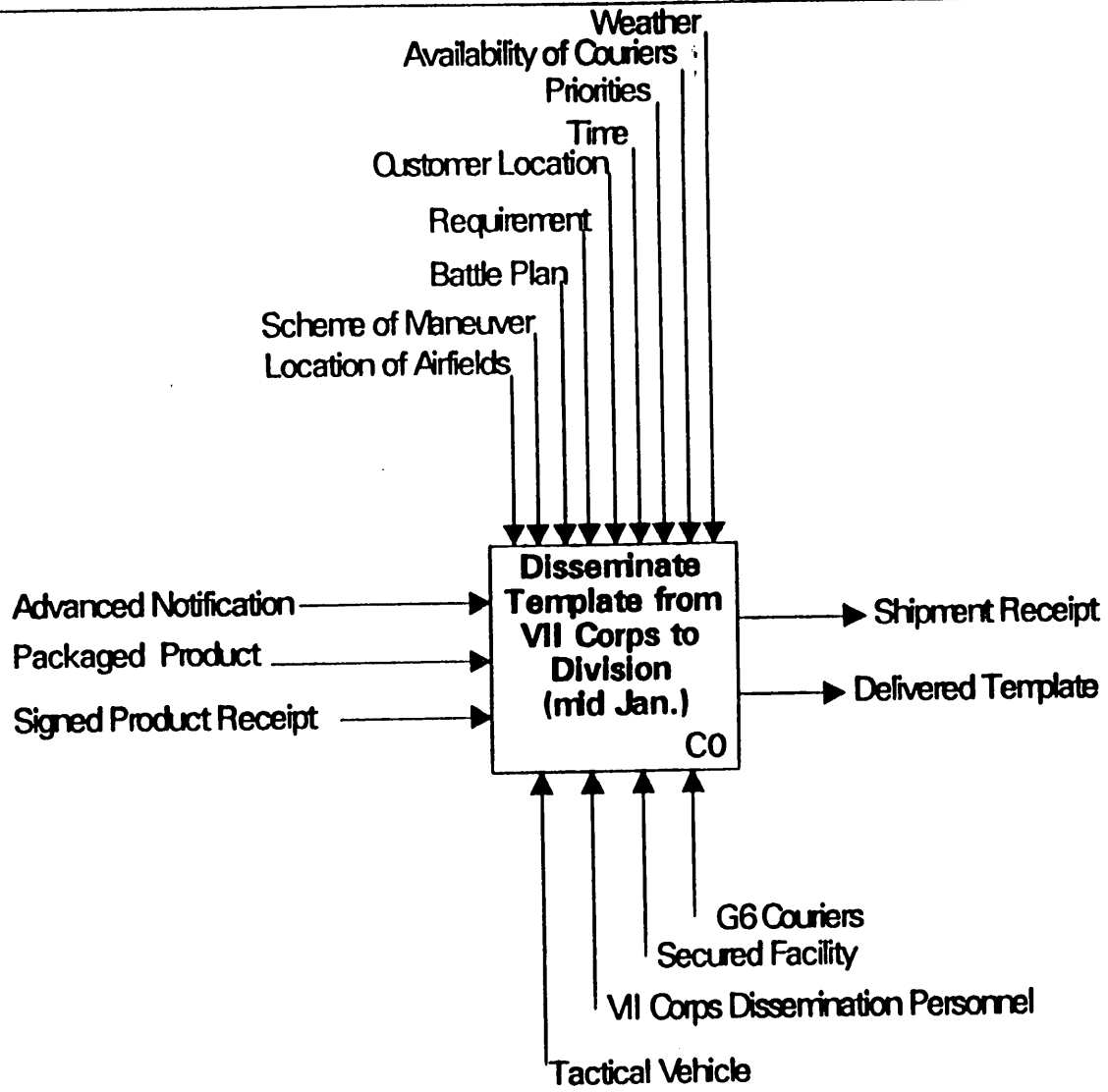

UNCLASSIFIED

NODE:	TITLE:	VIEWPOINT:
-0	Disseminate Template from V rps to Division (mid January) (U)	VII C 3

ELECTRONI FILE NAME: 130216C1.IDD	AUTHOR: IPSG Working Group PROJECT: IPSG NOTES: 1 2 3 4 5 6 7 8 9 10	NEW DATE: 0 '92 REV DATE: 4/1 ,92 REV NO: #4 11 AM	X	WORKING	READER DATE	C EXT:
				DRAFT		
				RECOMMENDED		
				PUBLICATION		

UNCLASSIFIED

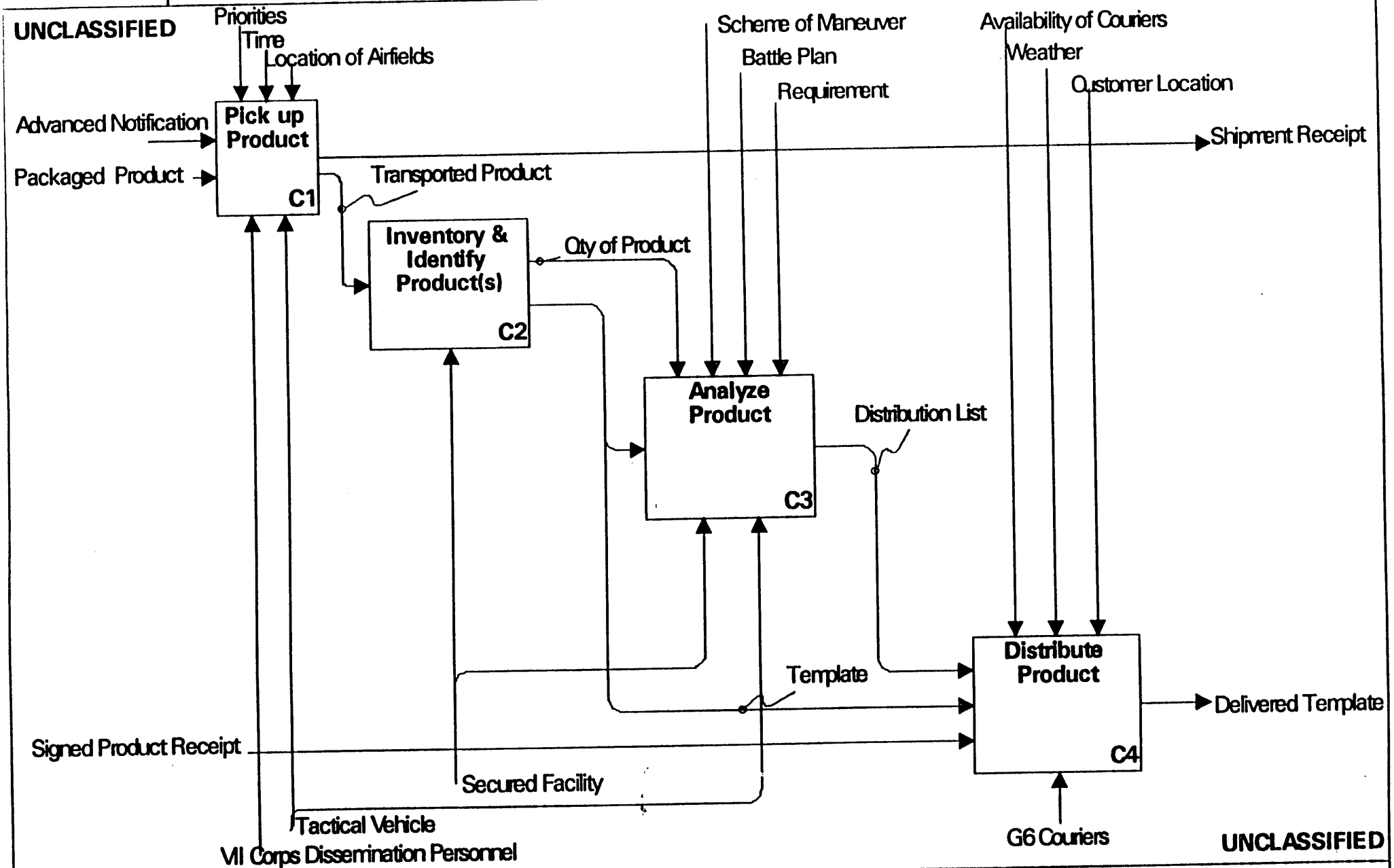

UNCLASSIFIED

NODE:	TITLE:	VIEWPOINT:
C0	Disseminate Template from VII Corps to Division (mid January) (U)	VII CORPS

VII Corps
Disseminate Template from VII Corps to Division (U)
Final Dictionary Report

Reference Report for: 130216C1.IDD

(U)Advanced Notification
Record Type: Input
Record Name: Advanced Notification
Definition = A call from higher headquarters directing VII Corps to pick up packaged product at a particular time and place. Constraints could be the lack of enough time to meet the conditions set forth. Example would be advanced notification of two hours to meet a plane with packaged product at a location that was a minimum of 2 - 3 hours from Corps location.
Creation Date = 3/19/92

(U)Analyze Product
Record Type: Activity
Record Name: 4/C3
Definition = Analyze the product by using the VII Corps scheme of maneuver, Battle Plan, and outstanding requirements to determine recipients, quantities of product to each recipient (customer), and formulate a distribution list.
Creation Date = 3/19/92
= (structure reference)

(U)Availability of Couriers
Record Type: Control
Record Name: Availability of Couriers
Definition = Personnel and equipment available to deliver the packaged product to the customer at the time desired. This can be a constraint as the responsibility for establishing the courier service within a corps headquarters resides with the G6 or Signal Corps Communications Section. The G2 cCorps Collection Management Section is not authorized personnel nor equipment to perform a dissemination function.
Creation Date = 4/02/92

(U)Battle Plan
Record Type: Control
Record Name: Battleplan
Definition = The VII Corps blueprint for conducting combat operations in order to accomplish assigned mission (friendly and enemy). It would contain the situation, mission, execution, service support, and command and signal necessary to conduct operations. In this context, it was used to identify areas of intelligence responsibility and interest for VII Corps subordinate commands in order to tailor the delivery of packaged products to the proper customers in the proper quantities (e.g., the Corps had very little interest in packaged products of enemy units facing MARCENT in eastern Kuwait).
Creation Date = 4/01/92

(U)Customer Location

Record Type: Control

Record Name: Customer Location

Definition = The actual location of the customers serviced by VII Corps Collection Management Section (includes the major subordinate commands-- 1st ID (M) 1st AD, 3d AD, 1st CD, 1st AD(UK), and 2d ACR-- along with major combat service support elements--207th MI BDE, MP, signal units and 2d COSCOM). Customer locations changed over time as customers relocated once or twice during the campaign.

Creation Date = 4/01/92

(U)Delivered Template

Record Type: Output

Record Name: Delivered Template

Definition = The packaged product (template) is physically delivered to the intended recipient (customer). A signed product receipt is executed by an authorized individual. Delivery could be 24-48 hours following receipt of packaged product at Corps headquarters.

Creation Date = 4/01/92

(U)Distribute Product

Record Type: Activity

Record Name: 4/C4

Definition = Distribute product to the intended customer, depending upon availability of couriers, weather, customer location, and customer acceptance via a signed shipment receipt.

Creation Date = 4/01/92

(U)G6 Couriers
Record Type: Mechanism
Record Name: G6 Couriers
Definition = The individuals assigned to the Corps G6 section responsible for couriering packaged product to Corps customers. The G6 (Communications) Section has responsibility for dissemination within the Corps headquarters. This section established a daily courier run via utility helicopter. Alternate means of travel was tactical vehicle.
Creation Date = 4/01/92

(U)Inventory & Identify Product(s)
Record Type: Activity
Record Name: 4/C2
Definition = Count the number of copies of each unique product and identify what that product is (e.g., mapsheet series and number, template, 20x24" annotated graphic, etc.)
Creation Date = 3/19/92

(U)Location of Airfields
Record Type: Control
Record Name: Location of Airfield
Definition = Location of airfield could be a constraint as KKMC was located considerable distance from our Corps headquarters; (about 2-3 hours drive by tactical vehicle dependent on volume and speed of traffic on Tapline Road, the sole line of communication for the Corps to reach KKMC). Further, it should be noted that it was higher headquarters' responsibility to deliver packaged products to the Corps HQ and not to an airfield two to three hours away, just as it was VII Corps' responsibility to deliver packaged products to our division.
Creation Date = 4/01/92

(U)Packaged Product
Record Type: Input
Record Name: Packaged Product
Definition = Hard copy materials dissemined within VII Corps. Includes maps, templates, and imagery products wrapped and inventoried.
Creation Date = 4/01/92

(U)Pick up Product
Record Type: Activity
Record Name: 4/C1
Definition = Pick-up hard copy materials (packaged product's) for dissemination within VII Corps at the location and time designated by higher headquarters (Note: dependent upon priorities, time of notification, and location of pick up point).
Creation Date = 4/01/92

(U)Priorities
Record Type: Control
Record Name: Priorities
Definition = Competing demands for limited resources. The Commanding General establishes priorities. His priorities are translated by the G2 into prioritized tasks for the dissemination section. (Note: competing priorities can adversely affect the responsiveness of that section to unscheduled requirements such as pick-up of packaged products at far away airfields).
Creation Date = 4/01/92

(U)Qty of Product
Record Type: Output/Control
Record Name: Quantity of Product
Definition = The number of copies of each unique piece of packaged product, (Note: constraint could be the volume of packaged product to be picked up, i.e., it couldn't fit in a tactical vehicle).
Creation Date = 3/19/92

(U)Requirement
Record Type: Control
Record Name: Requirement
Definition = A justified need of a customer, which has received by VII Corps, registered, validated, and been submitted as a need to the responsible activity for satisfaction. (In this context, a packaged product was checked against validated requirements in order to identify proper customer / recipient and administratively close-out requirement).
Creation Date = 4/01/92

(U)Scheme of Maneuver
Record Type: Control
Record Name: Scheme of Maneuver
Definition = The scheme of maneuver is part of the execution portion of the VII Corps battle plan. It outlines the divisional areas of operation sections of responsibility and includes control measures such as boundaries, phase lines, objectives, etc..
Creation Date = 4/01/92

(U)Secured Facility
Record Type: Mechanism
Record Name: Secured Facility
Definition = A Sensitive Compartmented Information Facility (SCIF) (Note: corps' collection management and dissemination activity was located in a field SCIF that consisted of a 5 ton expandable van surrounded by triple strand concertina wire and access guards (MPs) restricting access to the facility to those individuals with the proper clearances and need to know).
Creation Date = 4/01/92

(U)Shipment Receipt
Record Type: Output
Record Name: Shipment Receipt
Definition = A requirement for compartmented material transferred through for signal receipts Special Security Office (SSO) channels:
Creation Date = 4/01/92

(U)Signed Product Receipt
Record Type: Input
Record Name: Signed Product Receipt
Definition = A signed acknowledgement by the customer that he/she has received packaged product's with the identification indicated, along with specified quantities of each unique product.

(U)Tactical Vehicle

Record Type: Mechanism

Record Name: Tactical Vehicle

Definition = Army vehicles normally assigned to VII Corps collection management section. (Note: tactical vehicles appropriate for the transport of packaged product were limited to HUMVEE's and CUCV's).

Creation Date = 4/01/92

(U)Template

Record Type: Output/Input

Record Name: Template

Definition = A unique piece of packaged product. Overlaid imagery analysis on 1:50,000 Map sheets depicting enemy strong points, order of battle (OB), equipment, etc. (Note: VII Corps used a matrix to disseminate the templates. The matrix identified the Corps customers on one axis and the enemy order of battle on the other axis. The quantities of each template would be disseminated in accordance with the matrix percentages).

Creation Date = 4/01/92

(U)Time

Record Type: Control

Record Name: Time

Definition = Includes time of day and location and the amount of time between the advanced notification from higher headquarters and the time of scheduled pick-up at a distant airfield. (Note: both could have been constraints as there may not have been enough time between notification and pick-up to accomplish the mission. Night pickups could result in further delays or lost couriers).

Creation Date = 4/01/92

(U)Transported Product
Record Type: Output/Input
Record Name: Transported Product
Definition = Physical transportation of product from the pick-up point to the corps headquarters. Accomplished via tactical or commercial (range rovers) vehicles. (Note: constraint is no dedicated transport means assigned to corps collection management section for dissemination purposes).
Creation Date = 4/01/92

(U) VII Corps Dissemination Personnel
Record Type: Mechanism
Record Name: VII Corps Dissemination Personnel
Definition = Those personnel assigned an additional duty of dissemination within the collection management branch. I (Note: constraints included the fact that these personnel had other responsibilities besides the sole dissemination of packaged products).
Creation Date = 4/01/92

(U)Weather
Record Type: Mechanism
Record Name: Weather
Definition = Physical considerations included outside temperature, fog, duststorms, rain, sleet, etc. which can adversely affect the delivery of packaged products with the intended means of delivery, e.g., helicopters grounded.
Creation Date = 4/01/92

DIA SCENARIO
Solve Backfills of BTGs to SAC Bomber Wing (November)(U)

"D" Diagrams

ELECTROI FILE NAME: 130216D3.IDD	AUTHOR: IPSG Working Group PROJECT: IPSG NOTES: 1 2 3 4 5 6 7 8 9 10	NEW DATE(3/92 REV DATE:04/16/92 REV NO: #5	X	WORKING	READER DATE	ITEXT:
				DRAFT		
				RECOMMENDED		
				PUBLICATION		

UNCLASSIFIED

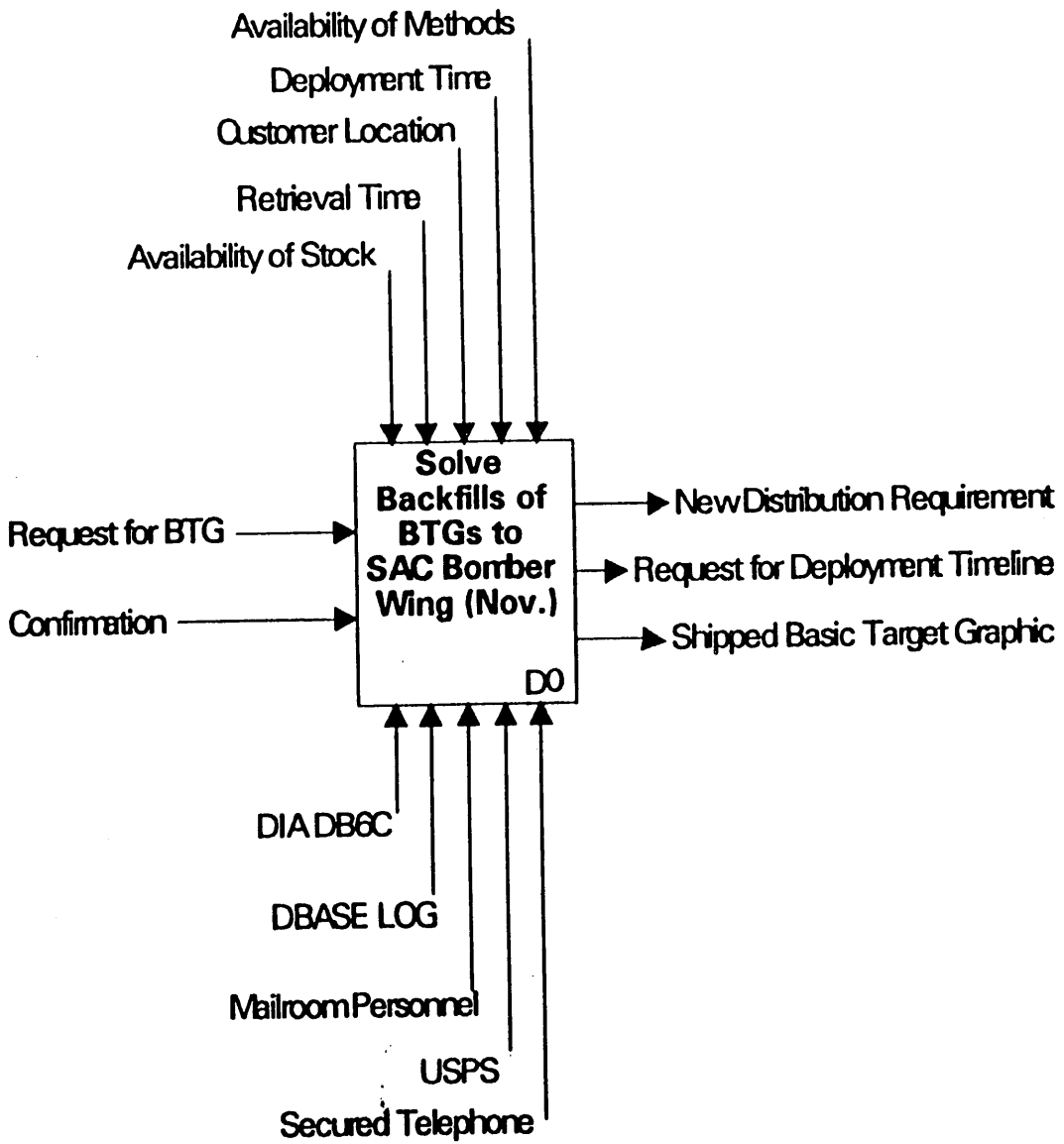

UNCLASSIFIED

NODE: C	TITLE: Solve Backfills of BTG's to SAC Bom Wing (November) (U)	VIEWPOINT: DIA

ELECTRO FILE NAME. 130216D3.IDD	AUTHOR: IPSG Working Group PROJECT: IPSG NOTES: 1 2 3 4 5 6 7 8 9 10	NEW DATE: 3/92 REV DATE: 0[illegible]6/92 REV NO: #5	X	WORKING	READER	DATE
				DRAFT		
				RECOMMENDED		
				PUBLICATION		

TEXT:

UNCLASSIFIED

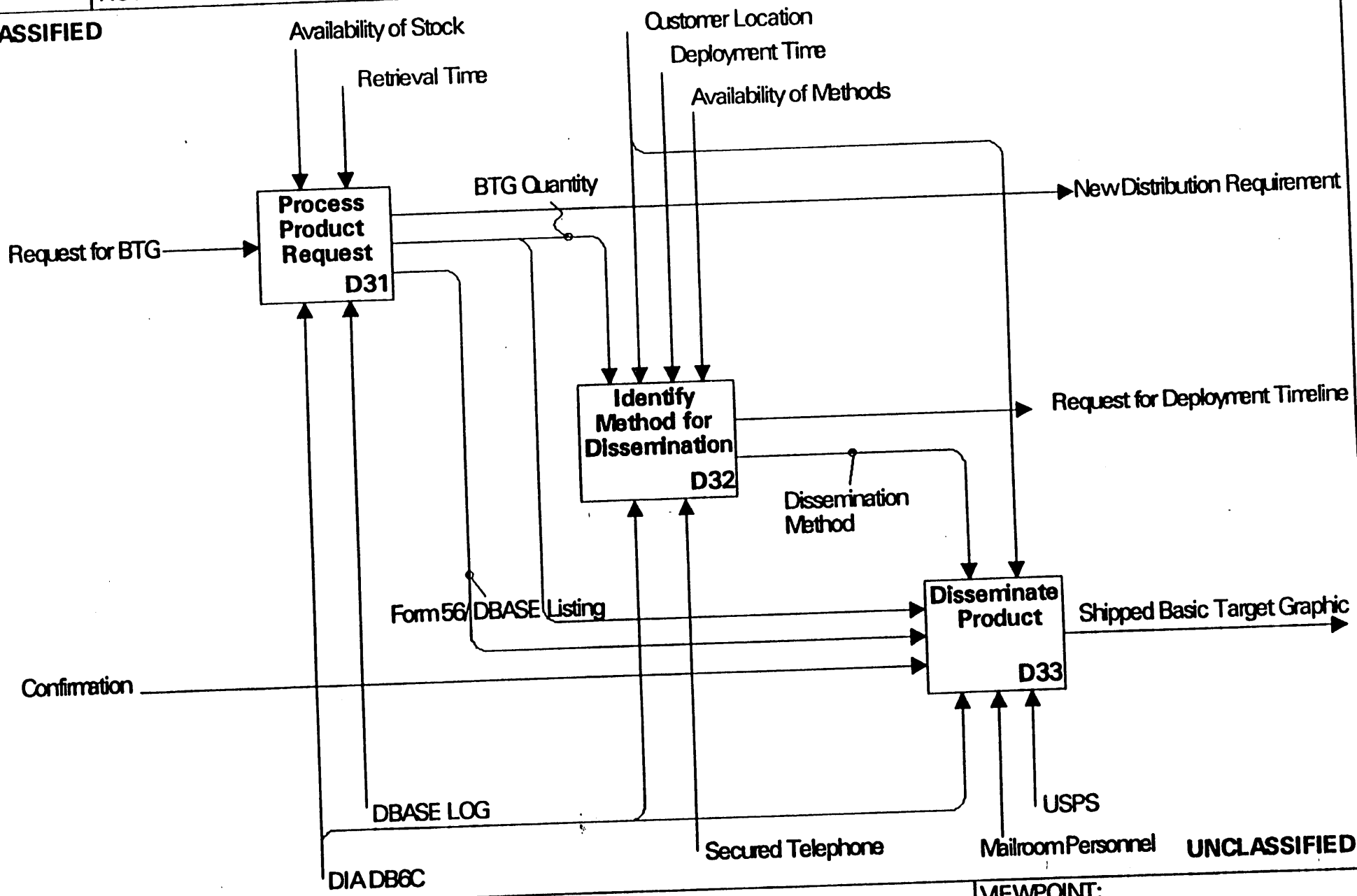

UNCLASSIFIED

NODE: D3	TITLE: Solve Backfills of BTG's to SAC Bomber Wing (November) (U)	VIEWPOINT: DIA

ELECTRO FILE NAME: 130216DD.IDD	AUTHOR: IPSG Working Group PROJECT: IPSG NOTES: 1 2 3 4 5 6 7 8 9 10	NEW DATE: 23/92 REV DATE: 04/15/92 REV NO: #3	X	WORKING	READER DATE	TEXT:
				DRAFT		
				RECOMMENDED		
				PUBLICATION		

UNCLASSIFIED

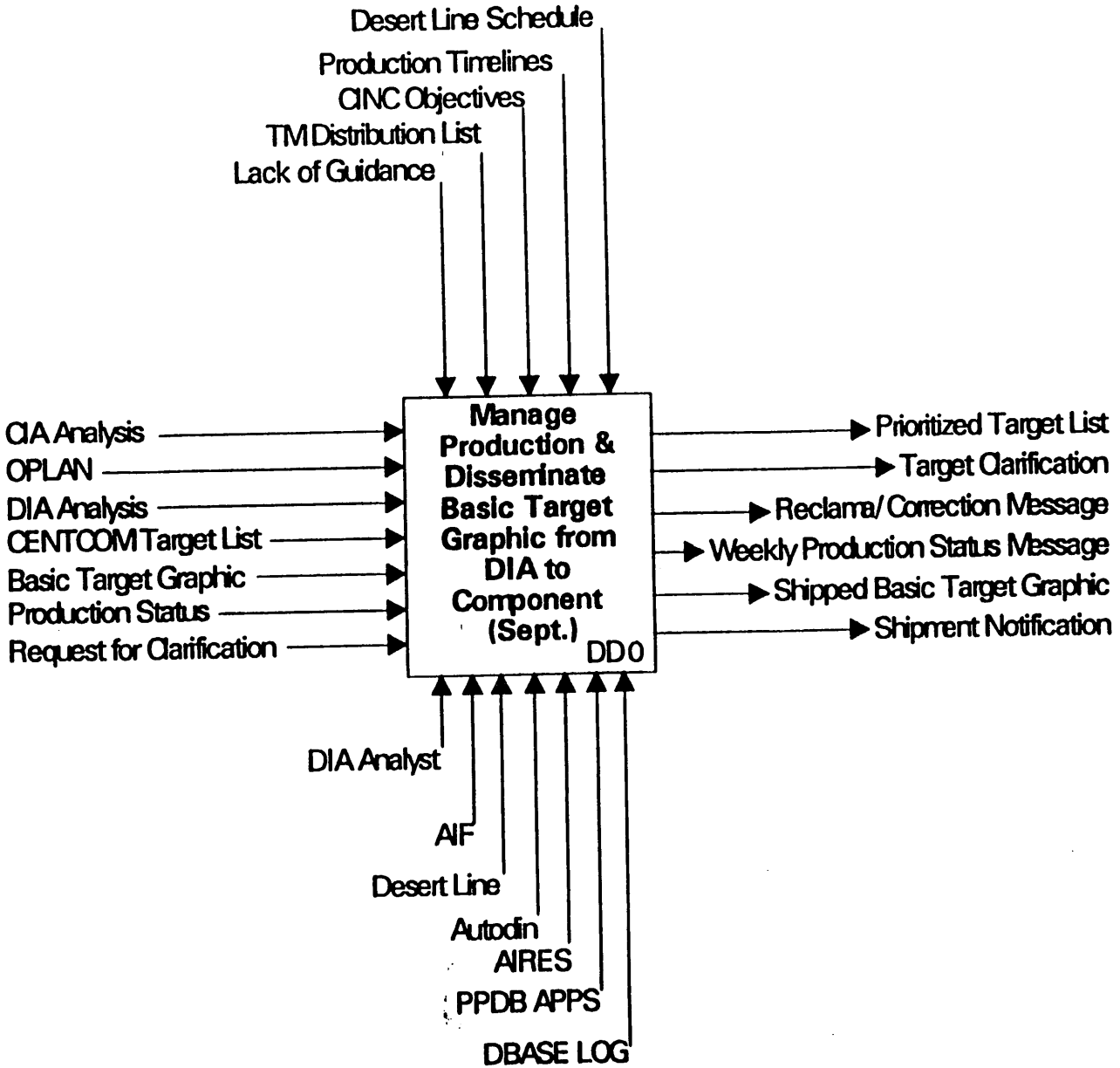

UNCLASSIFIED

NODE:	TITLE:	VIEWPOINT:
D-0	Manage Production &Disseminate Basic Target Graphic from DIA to Component (September) (U)	DIA

ELECTRC FILE NAME: 130216DD.IDD	AUTHOR: IPSG Working Group PROJECT: IPSG NOTES: 1 2 3 4 5 6 7 8 9 10	NEW DATE: 23/92 REV DATE: 04/15/92 REV NO: #3	X	WORKING	READER DATE	TEXT:
				DRAFT		
				RECOMMENDED		
				PUBLICATION		

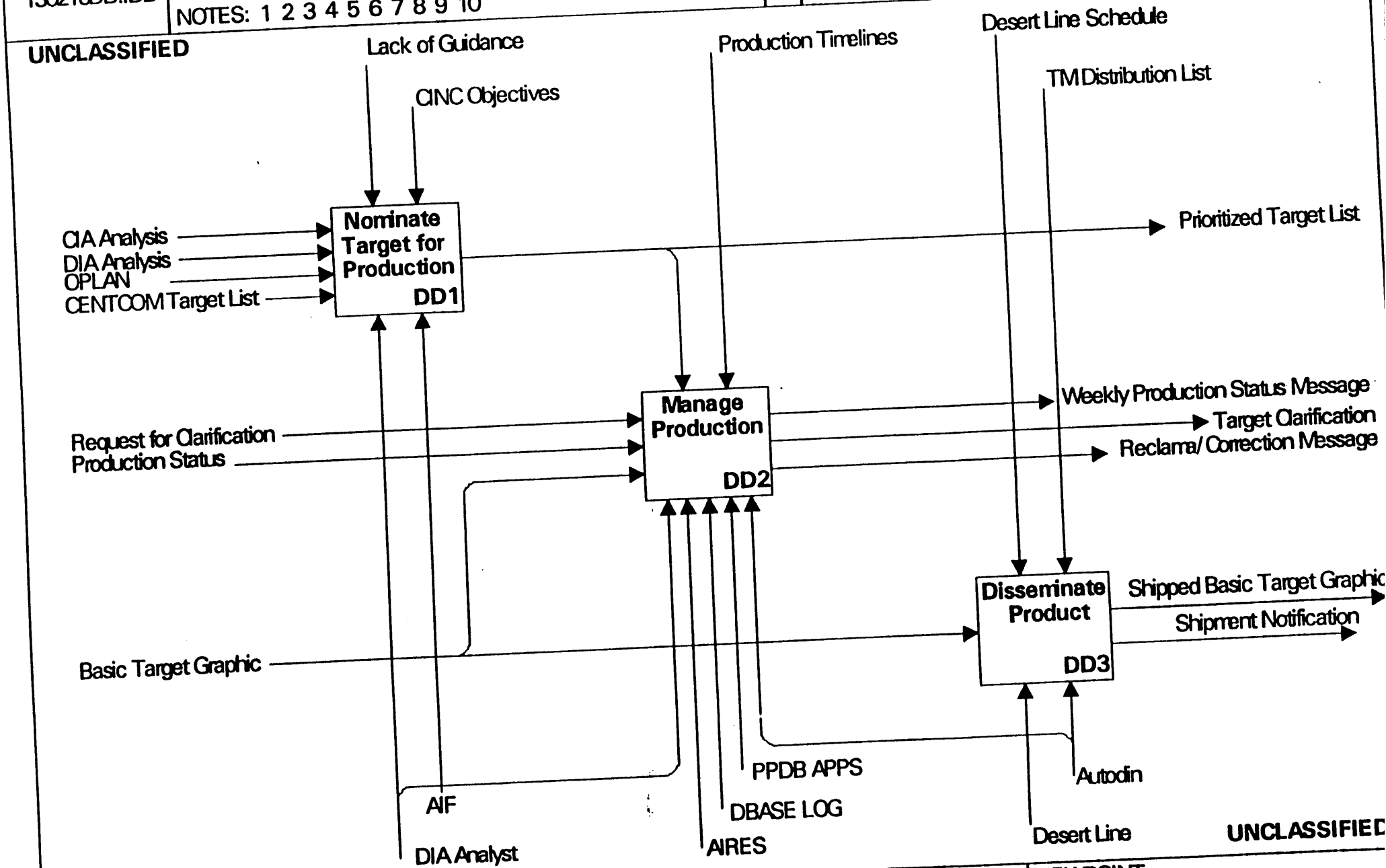

NODE: DD0	TITLE: Manage Production & Disseminate Basic Target Graphic from DIA to Component (September) (U)	VIEWPOINT: DIA

DIA

Manage Production & Disseminate Basic Target Graphic from DIA to Component (September) (U)
Solve Backfills of BTG's to SAC Bomber Wing (November)
Final Dictionary Report (U)

Reference Report for: 130216D3.IDD & 130216DD.IDD

(U)Autodin
Record Type: Mechanism
Record Name: Autodin
Definition = A means of transmitting data (i.e. messages) electronically.
Creation Date = 4/15/92

(U) Availability of Methods
Record Type: Control
Record Name: Availability of Methods
Definition = The identification of location and timelines that will determine which method of transport to use.
Creation Date = 4/15/92

(U)Availability of Stock
Record Type: Control
Record Name: Availability of Stock
Definition = Having the quantity of basic target graphics available for issue.
Creation Date = 4/15/92

(U)BTG Quantity
Record Type: Output/Control
Record Name: BTG Quantity
Definition = The number of basic target graphics (BTG).
Creation Date = 4/15/92

(U)Basic Target Graphic
Record Type: Input
Record Name: Basic Target Graphic (BTG)
Definition = The core tactical target material. It is designed as an intelligence aid in meeting operational requirements for weapon applications, mission planning, and crew debriefings; to provide a visual aid to area recognition and target discrimination by the combat crew. The BTG contains imagery for orientation and target identification, plus additional imagery as available, with annotations for critical elements and supporting textual information.

(U)CIA Analysis
Record Type: Input
Record Name: CIA Analysis
Definition = Central Intelligence Agency (CIA) interpretation of intelligence information to identify significant facts that evolve into recommended targets for BTG production.
Creation Date = 4/15/92

(U)CINC Objectives
Record Type: Control
Record Name: CINC Objectives
Definition = Commander-in-Chiefs (CINC) desired results of actions taken.
Creation Date = 4/15/92

(U)CENTCOM Target List
Record Type: Input
Record Name: CENTCOM Target List
Definition = Central Command's list of targets used for plans and operations.
Creation Date = 4/15/92

(U)Confirmation
Record Type: Input
Record Name: Confirmation
Definition = Verbal or written indication that a unit has received information.
Creation Date = 4/15/92

(U)Customer Location
Record Type: Control
Record Name: Customer Location
Definition = The place where material had to be shipped to reach a consumer.
Creation Date = 4/15/92

(U)DBASE LOG
Record Type: Mechanism
Record Name: DBASE Log
Definition = This was a log for keeping track of target material production. The log utilized a DBASE-3 database. This provided an automated forum for tracking target material production. It contained the targets (WAL-BE) TDI category code, coordinates, name, TM producer, date tasked, dated completed, date shipped and any unique remarks on the target.
Creation Date = 4/15/92

(U)Deployment Time
Record Type: Control
Record Name: Deployment Time
Definition = The amount of time before the relocation of forces to desired area of operation.
Creation Date = 4/15/92

(U)Desert Line
Record Type: Mechanism
Record Name: Desert Line
Definition = A code word for Defense Courier Service to deliver intelligence products for Desert Shield/Desert Storm to the CENTCOM ASR.
Creation Date = 4/15/92

(U)Desert Line Schedule
Record Type: Control
Record Name: Desert Line Schedule
Definition = The timelines available for Defense Courier Service supporting Desert Line.
Creation Date = 4/15/92

(U)DIA Analysis
Record Type: Input
Record Name: DIA Analysis
Definition = Defense Intelligence Agency (DIA) interpretation of intelligence information to identify significant facts that could evolve into recommended targets for Basic Target Graphic (BTG) production.
Creation Date = 4/15/92

(U)DIA DB6C
Record Type: Mechanism
Record Name: DIA DB6C
Definition = Defense Intelligence Agency (DIA) DB-6 was the targeting division and DB-6C was the target materials program office (TMPO). The new office is OGA-4A.
Creation Date = 4/15/92

(U)Dissemination Method
Record Type: Output/Control
Record Name: Dissemination Method
Definition = The chosen conveyance to transport material to intended user.
Creation Date = 4/15/92

(U)Form 56/DBASE Listing
Record Type: Output/Input
Record Name: Form 56/DBASE Listing
Definition = The SF Form 56 is a DIA form for receiving classified information. In this case a DBASE listing was attached with applicable items annotated that were shipped.
Creation Date = 4/15/92

(U)Lack of Guidance
Record Type: Control
Record Name: Lack of Guidance
Definition = Policy, direction, decision, or instruction having the effect of an order, but was not available.
Creation Date = 4/15/92

(U)Manage Production
Record Type: Activity
Record Name: 4/D2
Definition = The target material program office was in charge of Basic Target Graphic Management. This involved coordination/identification of producer's, target's, production and means of dissemination.
Creation Date = 4/15/92

(U)Nominate Target for Production
Record Type: Activity
Record Name: 4/D1
Definition = Targets nominated for production based on CINC guidance, OPLAN's, or other higher guidance.
Creation Date = 4/15/92

(U)OPLAN
Record Type: Input
Record Name: OPLAN
Definition = Operational Plan based upon stated assumptions and is the form of a directive employed by higher authority to permit subordinate commanders to prepare supporting plans and orders. OPLANS provide a base document for basic target graphic (BTG) production requirements.
Creation Date = 4/15/92

(U)PPDB APPS
Record Type: Mechanism
Record Name: PPDB APPS
Definition = Point Positioning Database (PPDB) is film based on ephermeral information encoded to derive precise coordinates. PPDB has to be utilized with the Analytical Photogrammetric Positioning System (APPS).
Creation Date = 4/15/92

(U)Prioritized Target List
Record Type: Output
Record Name: Prioritized Target List
Definition = Targets that have been nominated for production in priority order.
Creation Date = 4/15/92

(U)Production Status
Record Type: Input
Record Name: Production Status
Definition = Status of basic target graphic production (i.e. in production, or shipped).
Creation Date = 4/15/92

(U)Production Timelines
Record Type: Control
Record Name: Production Timelines
Definition = Time it takes to produce a basic target graphic (BTG).
Creation Date = 4/15/92

(U)Reclama/Correction Message
Record Type: Output
Record Name: Reclama/Correction Message
Definition = A message identification error with a basic target graphic (BTG).
Creation Date = 4/15/92

(U)Request for BTG
Record Type: Input
Record Name: Request for BTG
Definition = A verbal or written request for basic target graphics.
Creation Date = 4/15/92

(U)Request for Clarification
Record Type: Input
Record Name: Request for Clarification
Definition = Request for adjudication information about an installation/target from a competent authority.
Creation Date = 4/15/92

(U)Request for Deployment Timeline
Record Type: Output
Record Name: Request for Deployment Timeline
Definition = A timeline request to identify when and where a particular unit will move.
Creation Date = 4/15/92

(U)Retrieval Time
Record Type: Control
Record Name: Retrieval Time
Definition = The time allocated to retrieve basic target graphics from the file.
Creation Date = 4/15/92

(U)Secured Telephone
Record Type: Mechanism
Record Name: Secured Telephone
Definition = A STU III telephone to discuss classified material up to top secret and sensitive compartment information. A cryptographic device to enable classified discussions.
Creation Date = 4/15/92

(U)Shipment Notification
Record Type: Output
Record Name: Shipment Notification
Definition = A receipt form that identifies the contents of a package which is to be sent back to the original office.
Creation Date = 4/15/92

(U)Shipped Basic Target Graphic
Record Type: Output
Record Name: Shipped Basic Target Graphic
Definition = A BTG that has been packaged and entered into the distribution system.
Creation Date = 4/15/92

(U)Target Clarification
Record Type: Output
Record Name: Target Clarification
Definition = Request for adjudication information concerning target identification from a competent authority.
Creation Date = 4/15/92

(U)TM Distribution List
Record Type: Control
Record Name: TM Distribution List
Definition = List developed with USCINCOM identifying quantity and unit for distribution of basic target graphic (BTG's).
Creation Date = 4/15/92

(U)USPS
Record Type: Mechanism
Record Name: USPS
Definition = United States Postal Service.
Creation Date = 4/15/92

(U)Weekly Production Status Message
Record Type: Output
Record Name: Weekly Production Status Message
Definition = A weekly message that provided status on target material production. This message provided information on finished products with date shipped and method of shipment. Basic target graphic (BTG's) are identified by a BTG number, that consist of a releasability code (NF - No Foreign) and the basic encyclopedia number of the target.
Creation Date = 4/15/92

ELECTRC FILE NAME. SECRETE1.IDD	AUTHOR: IPSG Working Group PROJECT: IPSG NOTES: 1 2 3 4 5 6 7 8 9 10	NEW DATE 13/92 REV DATE: 4/02/92 REV NO: #1	X	WORKING	READER DATE	ITEXT: SECRET
				DRAFT		
				RECOMMENDED		
				PUBLICATION		

NODE: E-0	TITLE: Disseminate HUMINT Reports from SOCCENT to CENTCOM (Dec. - Mar 15) (U)	VIEWPOINT: SOCCENT

ELECTRC FILE NAME. SECRETE1.IDD	AUTHOR: IPSG Working Group PROJECT: IPSG NOTES: 1 2 3 4 5 6 7 8 9 10	NEW DATE 23/92 REV DATE: 4/02/92 REV NO: #1	X	WORKING	READER	DATE
				DRAFT		
				RECOMMENDED		
				PUBLICATION		

NEXT:

~~SECRET~~

NOFORN

EO

TITLE:
Disseminate HUMINT Reports from SOCCE[illegible] CENTCOM (Dec. - Mar 15) (U)

VIEWPOINT:
SOCCENT

SOCCENT
Disseminate HUMINT Reports from SOCCENT to CENTCOM (U) (Dec-Mar)
Final Dictionary Report

Reference Report for: 130216E.IDD

(U)ADP Mgmt System
Record Type: Mechanism
Record Name: ADP Management System
Definition = Stand-alone PC with database to manage incoming requirements and tasking as well as to correlate source data response with respective taskers. Additionally used to edit and prepare messages, etc. for transmittal.
Creation Date = 4/02/92

(U)Assess HUMINT
Record Type: Activity
Record Name: 3/E2
Definition = Review, correlate and assign reliability to source data.
Creation Date = 4/02/92

(U)Assessed Time-Critical HUMINT
Record Type: Output/Input
Record Name: Assessed Time-Critical HUMINT
Definition = HUMINT source data critical to immediate missions and/or planning.
Creation Date = 4/02/92

(U)Availability of Communications
Record Type: Control
Record Name: Availability of Communications
Definition = Availability between controllers and sources to task requirements and/or transmit data.
Creation Date = 4/01/92

(U)Availability of Manpower
Record Type: Control
Record Name: Availability of Manpower
Definition = Human Intelligence Collection Controller Specialists were responsible for staffing several locations while maintaining 24-hour a day, seven-day-a-week availability. Manpower shortfalls resulted in long work periods with few off-duty periods.
Creation Date = 4/01/92

(U)Bateen-Star
Record Type: Mechanism
Record Name: Bateen-Star
Definition = CENTCOM C-131 used for routine (twice-weekly) air transport of personnel and supplies.
Creation Date = 4/01/92

(U)C-21
Record Type: Mechanism
Record Name: C-21
Definition = USAF Leurjets used in Desert Shield/Storm to transport leadership and/or priority materials.
Creation Date = 4/02/92

(U)Formatted Message
Record Type: Output/Input
Record Name: Formatted Message
Definition = IIR format.
Creation Date = 4/02/92

(U)Forward HUMINT
Record Type: Activity
Record Name: 3/E3
Definition = Transmit source data electronically (message or telephonic), or via hardcopy.
Creation Date = 4/02/92

(U)HUMINT Source Data
Record Type: Input
Record Name: HUMINT Source Data
Definition = Raw data provided by source either in response to levied requirements or on initiative as favorable situations arise.
Creation Date = 4/01/92

(U)Location
Record Type: Control
Record Name: Location
Definition = Physical location of sources within KTO (Kuwait Theater of Operations).
Creation Date = 4/02/92

(U)Manage HUMINT Collection
Record Type: Activity
Record Name: 3/E1
Definition = Coordinate collection requirements between operational commanders and human collectors, and collate requirements with responses.
Creation Date = 4/02/92

(U)Operations Intel Personnel
Record Type: Mechanism
Record Name: Operations Intel Personnel
Definition = HUMINT source specialists (3 officers, 2 enlisted)
Creation Date = 4/02/92

(U)Request for Amplification
Record Type: Output/Input
Record Name: Request of Amplification
Definition = Subsequent communication to HUMINT source requesting additional information, clarifications and/or confirmation of initial data.
Creation Date = 4/02/92

(U)Requirement
Record Type: Input
Record Name: Requirement
Definition = Intelligence requirements better satisfied through human collection efforts rather than imagery or other technical methods.
Creation Date = 4/02/92

(U)Secured Telephone
Record Type: Mechanism
Record Name: Secured Telephone
Definition = STU-III, KY-57.
Creation Date = 4/02/92

(U)Tasking
Record Type: Output
Record Name: Tasking
Definition = Intelligence requirements levied by operational commanders for collection/satisfaction by human sources.
Creation Date = 4/02/92

(U)Transmitted HUMINT
Record Type: Output
Record Name: Transmitted HUMINT
Definition = Formatted HUMINT Source data forwarded up the chain of command.
Creation Date = 4/02/92

(U)Vehicles
Record Type: Mechanism
Record Name: Vehicles
Definition = J2 assigned British Land Rovers, Toyota Celicas and Ford 4x4s.
Creation Date = 4/02/92

ELECTROI FILE NAME. 130216F0.IDD	AUTHOR: IPSG Working Group PROJECT: IPSG NOTES: 1 2 3 4 5 6 7 8 9 10	NEW DATE: 7/92 REV DATE: 4, ./92 REV NO: #1	X	WORKING	READER DATE	TEXT:
				DRAFT		
				RECOMMENDED		
				PUBLICATION		

UNCLASSIFIED

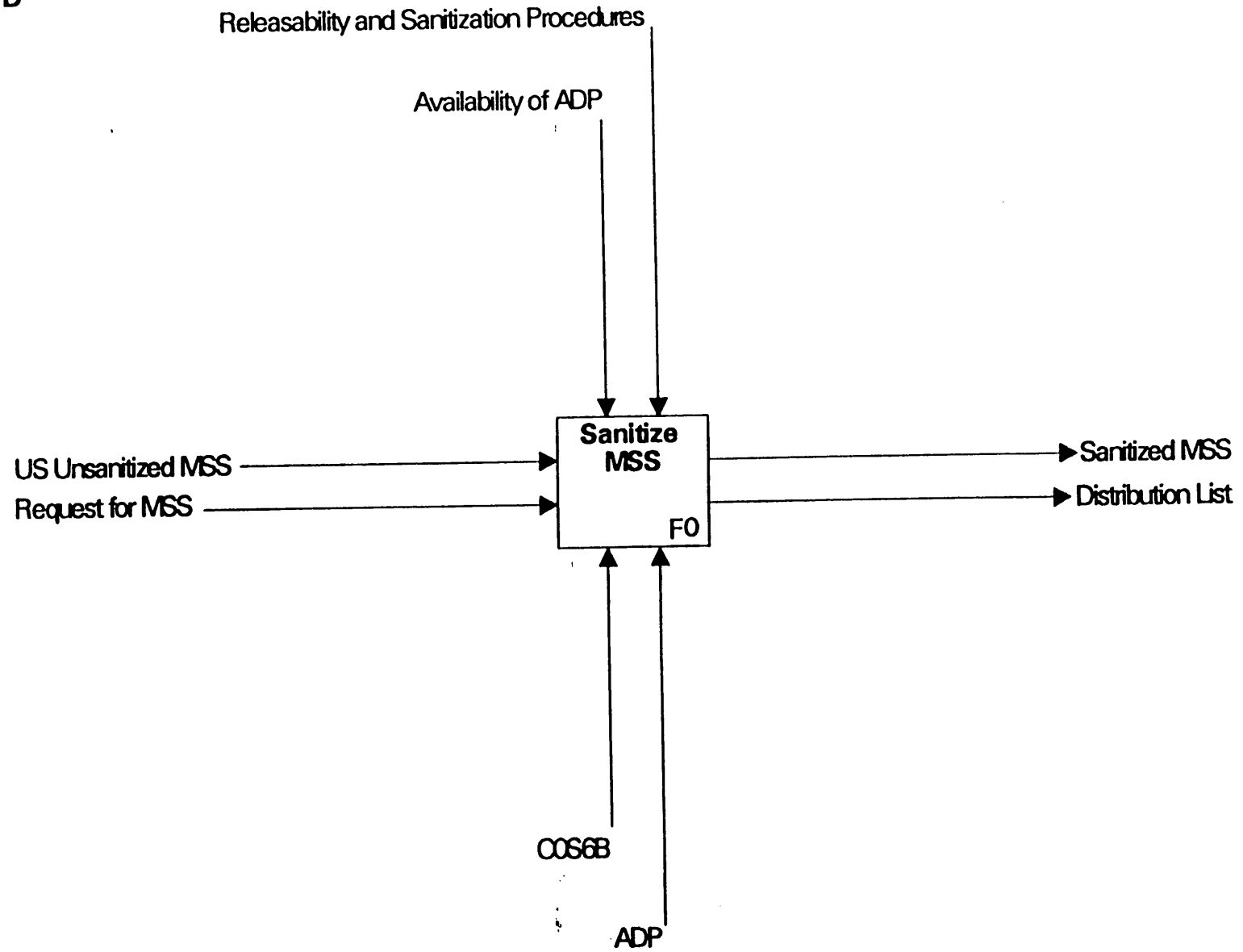

UNCLASSIFIED

NODE: F-0	TITLE: Santize MSS (U)	VIEWPOINT: DIA COS6B

DIA COS-6B
Santize MSS (U)
Final Dictionary Report

Reference Report for: 130216F0.IDD

(U)ADP
Record Type: Mechanism
Record Name: ADP
Definition = Automated Data Processing (ADP) equipment (computers/work stations) necessary to prepare releasable products.
Creation Date = 4/06/92

(U)Availability of ADP
Record Type: Control
Record Name: Availability of ADP
Definition = Computer equipment that must be available and in proper working order to accomplish the necessary results.
Creation Date = 4/06/92

(U)COS-6B
Record Type: Mechanism
Record Name: COS-6B
Definition = DIA's; Foreign Disclosures Branch (COS-6B), responsible for adjudicating the release of and dissemination of DIA products to foreign governments and/or international organizations.
Creation Date = 4/06/92

(U)Distribution List
Record Type: Output
Record Name: Distribution List
Definition = Those activities, foreign governments, international organizations, who will receive the MSS (Military Situations Summary). List may be based on COS-6Bs perception of need-to-know as well as formal request from potential recipient to include US recipients who were not eligible for the highly classified US MSS.
Creation Date = 4/06/92

(U)Releasability and Sanitization Procedures
Record Type: Control
Record Name: Releasability-Sanitization-Procedures
Definition = Releasability - the physical release of intelligence to a foreign government and/or international organization. Sanitization- the procedure used to protect sources and methods based on guidance to make an intelligence product releasable to a foreign government and/or international organization.
Creation Date = 4/06/92

(U)Request for MSS
Record Type: Input
Record Name: Request for MSS
Definition = Requests from foreign governments and US units received by COS-6B to be included on distribution of the releasable (sanitized) MSS.
Creation Date = 4/06/92

(U)Sanitize MSS
Record Type: Activity
Record Name: 4/2
Definition = Physical removal of all references to sources; any intelligence that cannot be sanitized; outside eligibility of recipient to receive product to lowest level to match releasability requirements.
Creation Date = 4/06/92

(U)Sanitized MSS
Record Type: Output
Record Name: Sanitized MSS
Definition = A releasable version of the highly classified US MSS, disseminated to foreign governments/international organizations and, where applicable, to US units who could not receive the unsanitized US version
Creation Date = 4/06/92

(U)US Unsanitized MSS

Record Type: Input

Record Name: US Unsanitized MSS

Definition = Highly classified version of the MSS which is not disseminated to foreign governments/international organizations.

Creation Date = 4/06/92

DIA SCENARIO
Disseminate GRG from DIA to CENTCOM and 2 MARDIV COLS (Late January) (U)

"G" Diagrams

(U) OGA/A acted as the focal point for Desert Line shipments. A wide variety of products were produced by DIA and by other production centers and shipped via Desert Line. The Gridded Reference Graphic (GRG) chosen for this scenario was requested by the 1st and 2nd Marine Divisions. Even though this product had a limited distribution, it illustrates DIA's capability to provide tailored production to meet a time sensitive requirement. Any number of products could have been chosen to examine DIA's role in product dissemination during war. While other products had a much wider distribution, the production and distribution of this product was indicative of how the crisis/operational support branch response to requirements. The procedures used to meet this requirement are the same for any of the hundreds of operational support products that were lithographically reproduced to support Operation Desert Shield/Desert Storm.

ELECTI C FILE NAME: 130216G1.IDD	AUTHOR: IPSG Working Group PROJECT: IPSG NOTES: 1 2 3 4 5 6 7 8 9 10	NEW DATE /23/92 REV DATE: 4/14/92 REV NO: #5 10am	X	WORKING	READER DAT
				DRAFT	
				RECOMMENDED	
				PUBLICATION	

NTEXT:

UNCLASSIFIED

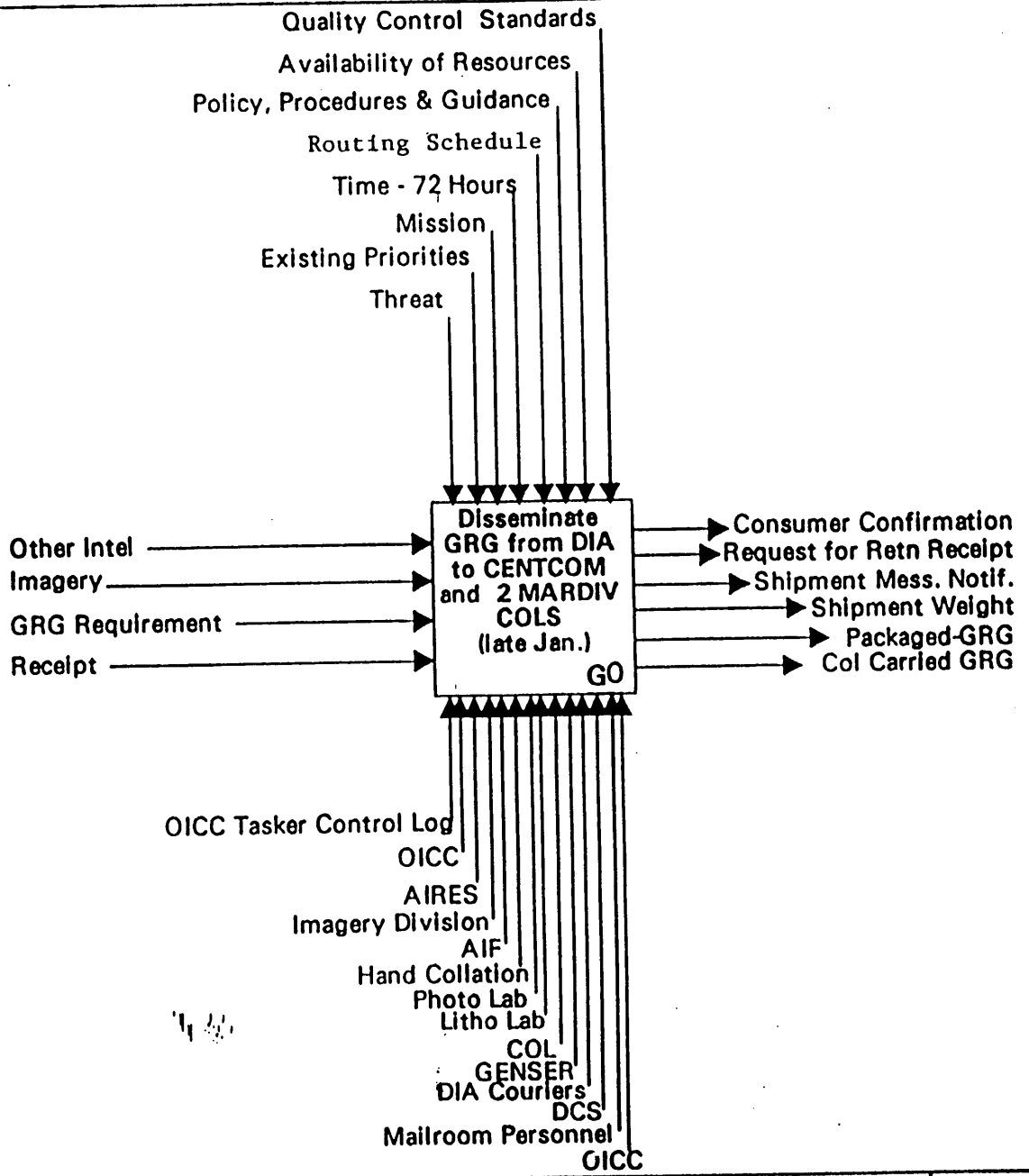

UNCLASSIFIED

NODE: G	TITLE: Disseminate GRG From DI/ CENTCOM and 2 MARDIV COLS (la anuary) (U)	VIEWPOINT: DIA

:LECTR :ILE NAME: 130216G1.IDD	AUTHOR: IPSG Working Group PROJECT: IPSG NOTES: 1 2 3 4 5 6 7 8 9 10	NEW DATE: /93/92 REV DATE: 4/1 2 REV NO: #5 10am	X	WORKING	READER	DAT
				DRAFT		
				RECOMMENDED		
				PUBLICATION		

EXT:

UNCLASSIFIED

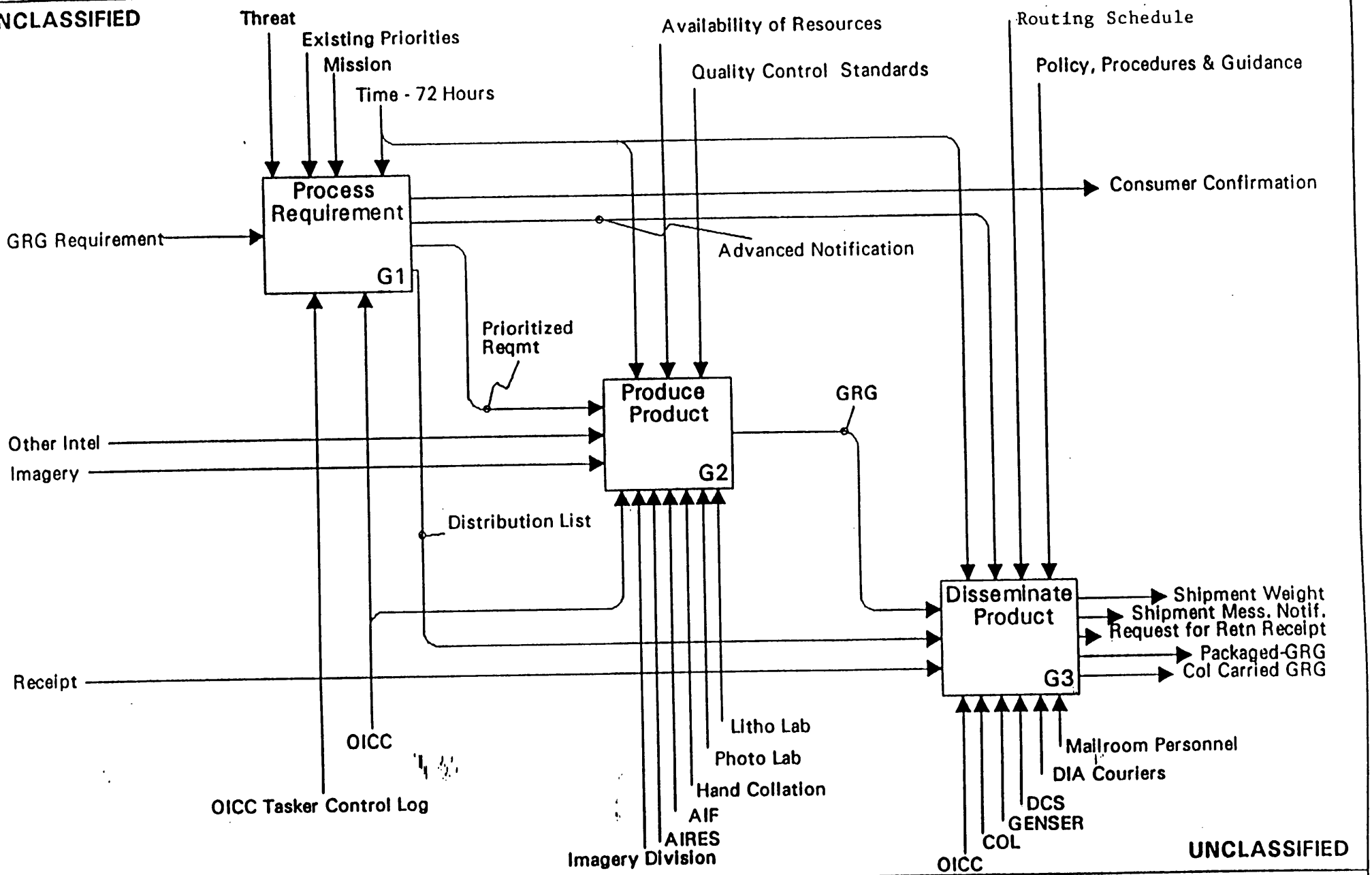

UNCLASSIFIED

NODE: G0	TITLE: Disseminate GRG From DIA to CENTCOM and 2 MARDIV COLS (late-January) (U)	VIEWPOINT: DIA

DIA
Disseminate GRG from DIA to CENTCOM and 2 MARDIV COLS (Late January)(U)
Final Dictionary Report

Reference Report for: 130216G1.IDD

(U)AIF
Record Type: Mechanism
Record Name: AIF
Definition = Automated Installation Intelligence File. A DIA database that provides users specific information regarding installations/facilities worldwide. (i.e. airfield in country x - specifications of Runway, aircraft assigned, LAT/LONG/BE NUMBER/CAT CODE/etc.)
Creation Date = 4/13/92

(U)AIRES
Record Type: Mechanism
Record Name: AIRES
Definition = Advanced Imagery Requirements and Exploitation System. AIRES is an imagery-derived/oriented system. The system is a useful analytical tool used to support imagery analysis. System is loaded primarily against the Automated Installation Intelligence File (AIF).
Creation Date = 4/13/92

(U)Advanced Notification
Record Type: Output/Control
Record Name: Advanced Notification
Definition = Once the requirement has been recorded and the proper analysts notified and tasked, OICC/OGAA-1A personnel will notify production and dissemination assets that a time-sensitive/operation support product is being worked and will require their assistance and support.
Creation Date = 4/14/92

(U)Availability of Resources
Record Type: Control
Record Name: Availability of Resources
Definition = The availability of resources is a factor in meeting the requirement. OGA-IAI OGA-IA2 contact appropriate support elements to notify them of the nature of the requirement and determine if there are any problems that could adversely impact on its successful completion. (i.e. press equipment down, aircraft unavailable, etc.)
Creation Date = 4/13/92

(U)COL
Record Type: Mechanism
Record Name: COL
Definition = Colonel: 0-6 level in the US military. In this scenario, 2 colonels assigned to the 1st and 2nd Marine Divisions in the Kuwait Theater of Operations (KTO) provided guidance in the development of the products.
Creation Date = 4/13/92

(U)Colonel Carried GRG
Record Type: Output
Record Name: Colonel Carried Gridded Reference Graphic (GRG)
Definition = GRG's used for this scenario were tailored to meet a specific operational requirement. Two Colonels assigned to the 1st and 2nd Marine Divisions worked closely with DIA analysis to provide specific guidance during the production phase. Once the product was produced by the fixed suspense, the Colonels hand-carried copies of the GRG's back to the theater.
Creation Date = 4/13/92

(U)Consumer Confirmation
Record Type: Output
Record Name: Consumer Confirmation
Definition = The consumer is notified via MSG or telephone that the requirement was received and how DIA's would respond. Modifications to specific aspects of requirements necessary to ensure a quality product that is produced in a timely fashion.
Creation Date = 4/13/92

(U)DCS
Record Type: Mechanism
Record Name: DCS
Definition = A joint DoD Courier service with the Army Chief of Staff as Executive Agent. The courier service provides one of the available methods for the secure and expeditious transmission of material requiring protected handling by military courier.
Creation Date = 4/13/92

(U)DIA Couriers
Record Type: Mechanism
Record Name: DIA Couriers
Definition = Couriers assigned to DIA responsible for the secure physical transmission and delivery of documents and material.
Creation Date = 4/13/92

(U)Disseminate Product
Record Type: Activity
Record Name: 3/G3
Definition = Dissemination is the timely conveyance of intelligence in an appropriate form and by appropriate means to those who need it. Dissemination was handled via courier, DCS, registered mail, and postal express during Desert Line. Each piece distributed was given a control number in order to track the product once it enters the system.
Creation Date = 4/13/92

(U)Distribution List
Record Type: Output/Input
Record Name: Distribution List
Definition = A list of consumers and recipients of the finished product and the means of delivery. The list is provided to DIA by the originator of the requirement.
Creation Date = 4/13/92

(U)Existing Priorities
Record Type: Control
Record Name: Existing Priorities
Definition = Upon receipt of the GRG requirement, a determination was made early on how the orginal requirement would impact on time-sensitive requirements already in the production cycle.
Creation Date = 4/13/92

(U)GENSER
Record Type: Mechanism
Record Name: GENSER
Definition = General Service. The JSISC provides general service record communications support for DIA. The center is responsible for reliable, secure, rapid message transmission.
Creation Date = 4/13/92

(U)GRG
Record Type: Output
Record Name: GRG
Definition = Gridded Reference Graphic. An imagery-based unannotated product used as a baseline document to support operational planning in a select geographic area. Photos are overlayed with an arbitrary/unrectified grid to facilitate the reportage of locational data between parties. Numerous GRGs were requested and produced to support Desert Shield/Storm operational planning. The GRG used for this particular scenario was modified as requested and tailored to meet a specific objective.
Creation Date = 4/13/92

(U)GRG Requirement
Record Type: Input
Record Name: GRG Requirement
Definition = This requirement is a tasking levied against DIA to produce a GRG in order to support operational planning in a timely fashion. Tasking involved using DIA's national assets and analytical expertise to produce this product.
Creation Date = 4/14/92

(U)Hand Collation
Record Type: Mechanism
Record Name: Hand Collation
Definition = The GRG is produced in 17X22 size pages. GRG's along with other over-sized products are assembled manually.
Creation Date = 4/13/92

(U)Imagery
Record Type: Input
Record Name: Imagery
Definition = Imagery Intelligence. Intelligence information derived from the exploitation of collection by visual photography, infrared sensors, lasers, electro optics and radar sensors wherein images of objects are reproduced optically or electronically displayed.
Creation Date = 4/13/92

(U)Imagery Division
Record Type: Mechanism
Record Name: Imagery Division
Definition = A directorate within DIA responsible for imagery analysis. The GRG in this scenario was produced by imagery analysts.
Creation Date = 4/13/92

(U)Litho Lab
Record Type: Mechanism
Record Name: Litho Lab
Definition = A production facility essential to producing intelligence support products. The bulk of operational support type products are lithographically produced. The litho process is the most expeditious and cost effective means available to DIA to produce the quality, unique formats, and volume necessary to meet time sensitive requirements.
Creation Date = 4/13/92

(U)Mailroom Personnel
Record Type: Mechanism
Record Name: Mailroom Personnel
Definition = OGA-IA worked closely with mailroom personnel to package and load Desert Line material. Mailroom had assigned duties, but assisted OGA-IA in the Desert Line operation. Mailroom personnel provided guidance and instructions necessary to meed DCS standards.
Creation Date = 4/13/92

(U)Mission
Record Type: Control
Record Name: Mission
Definition = DIA can respond with a tailored product to meet the requirement- if details regarding the specific nature of the operators mission, task, and objective is known. For this scenario, the GRG was tailored to support a specific objective (i.e. a breaching operation).
Creation Date = 4/14/92

(U)OICC
Record Type: Mechanism
Record Name: OICC
Definition = Operational Intelligence Crisis Center (OICC). OICC is a component of the Defense Intelligence Agency under Office of Global Analysis (OGA) that functions as DIA's focal point for JCS directed taskings requiring expeditious response to time-sensitive operational support requirements. OICC activities include tasking and coordination with proper DIA elements to meet time-sensitive requirements.
Creation Date = 4/13/92

(U)OICC Tasker Control Log
Record Type: Mechanism
Record Name: OICC Tasker Control Log
Definition = The tasker control log is a database used during Operation Desert Shield/Desert Storm to record, track and monitor taskers. The GRG requirement was one of approximately 6,000 taskers DIA responded to during the Gulf war. This system proved indispensable.
Creation Date = 4/13/92

(U)Other Intelligence
Record Type: Input
Record Name: Other Intelligence
Definition = Other sources of information may have been used to produce the GRG. IMINT (Imagery Intelligence) could have been used with HUMINT (Human Intelligence) or SIGINT (Signals Intelligence) to confirm information collected from one source.
Creation Date = 4/13/92

(U)Packaged-GRG
Record Type: Output
Record Name: Packaged-GRG
Definition = The number of copies for each product produced are folded and placed in double boxes for shipment of classified material. Mailroom personnel assisted in providing OGA-1A with shipping regulations and procedures to ensure that all Desert Line products met DCS standards. This precluded unnecessary delays in meeting fixed flight schedules.
Creation Date = 4/13/92

(U)Photo Lab
Record Type: Mechanism
Record Name: PhotoLab
Definition = A support element within DIA that receives photographic requests from the imagery analyst and produced the prints that the imagery analyst will in-turn annotate prior to litho work.
Creation Date = 4/13/92

(U)Policy, Procedures & Guidance
Record Type: Control
Record Name: Policy, Procedures and Guidance
Definition = All classified material is required to be double wrapped. Desert Line material was packaged in double-boxes (i.e. one smaller box that could easily fit inside a larger one). The inside box requires proper classification of its contents. In this particular case the GRG's were classified SECRET/NF/WN and so stamped. The outside box requested a Defense Courier Service (DCS) label with the DCS account code. In addition, a Desert Line decal was placed in the upper right hand corner of each package to ensure the piece would be handled expeditiously.
Creation Date = 4/12/92

(U)Prioritized Requirement
Record Type: Output/Input
Record Name: Prioritized Requirement
Definition = A determination is made as to the criticality of the product. Products that have longer suspenses would be placed lower on the priority list and would be treated in a routine fashion (normal working hours) others might require overtime support to meet short-fused tasking. The GRG's in this scenario was given a number 1 priority due to its criticality in supporting a breaching operation.
Creation Date = 4/13/92

(U)Process Requirement
Record Type: Activity
Record Name: 3/G1
Definition = Once the requirement has been received by the OICC, the information extracted is recorded in a database for tracking and retrieval purposes. A determination then is made as to which elements should assume primary action on the requirement and which element should provide support and coordination.
Creation Date = 4/13/92

(U)Produce Product
Record Type: Activity
Record Name: 3/G2
Definition = After a quality control check is performed on the product a publication run-sheet is created. The product then is ready for the litho process. After several stages of preparation the finished product is again quality-controlled and if found to be satisfactory, it is collated and stapled if necessary. The GRG is now ready for packaging. This GRG consisted of 3 parts. Each part was approx 25-30 pages. Approximately, 150 copies of each part were produced.
Creation Date = 4/13/92

(U)Quality Control Standards
Record Type: Control
Record Name: Quality Control Standards
Definition = OGA-IA will review the product prior to litho and afterward to determine if the product has met minimum standards- (i.e., format/accuracy/imagery standards). Product is reviewed to ensure that necessary components are present and correct.
Creation Date = 4/13/92

(U)Receipt
Record Type: Input
Record Name: Receipt
Definition = Inside each package of material a form 56 (transmittal receipt) signed by a branch chief is included. The form includes the name of the recipient, number of copies and a description of the product. The recipient is requested to sign the bottom third of this sheet and return it ASAP to avoid tracer action. A copy of the signed receipt is kept on file as well.
Creation Date = 4/13/92

(U)Request for Return Receipt
Record Type: Output
Record Name: Request for Return Receipt
Definition = A form 56 is included in each shipment. After the product has reached its proper destination, the recipient inventories the contents of the package. If the receipt accurately reflects the contents, the bottom third is then signed, dated, removed and mailed back to DIA.
Creation Date = 4/13/92

(U)Shipment Mess. Notif.
Record Type: Output
Record Name: Shipment Message Notification
Definition = Once the shipment is ready to be shipped to BWI, OGA-IA sends a MSG to designated recipients to inform them that the package is in the system. DCS and TRANSCOM are also notified. MSG includes DCS account codes, BA number for tracking within the courier system and the estimated arrival date.
Creation Date = 4/16/92

(U)Shipment Weight
Record Type: Output
Record Name: Shipment Weight
Definition = Weight is critical to air shipments DCS requires that each piece be weighed and marked in the upper left of each package and recorded.
Creation Date = 4/13/92

(U)Threat
Record Type: Control
Record Name: Threat
Definition = The threat level associated with any crisis situation is a factor in the prioritization of the requirements within DIA. If the threat level to US forces or personnel is defined high or circumstances warrant immediate action - the requirement is treated with priority.
Creation Date = 4/13/92

(U)Time - 72 Hours
Record Type: Control
Record Name: Time- 72 - Hours
Definition = The GRG requirement specified that the product would be needed in 72 hours to support operational planning.
Creation Date = 4/13/92

ELECTRO FILE NAME: 130216J0.IDD	AUTHOR: IPSG Working Group PROJECT IPSG: NOTES: 1 2 3 4 5 6 7 8 9 10	NEW DATE: 3/92 REV DATE: 4/16/92 REV NO: #2	X	WORKING	READER DATE	TEXT:
				DRAFT		
				RECOMMENDED		
				PUBLICATION		

UNCLASSIFIED

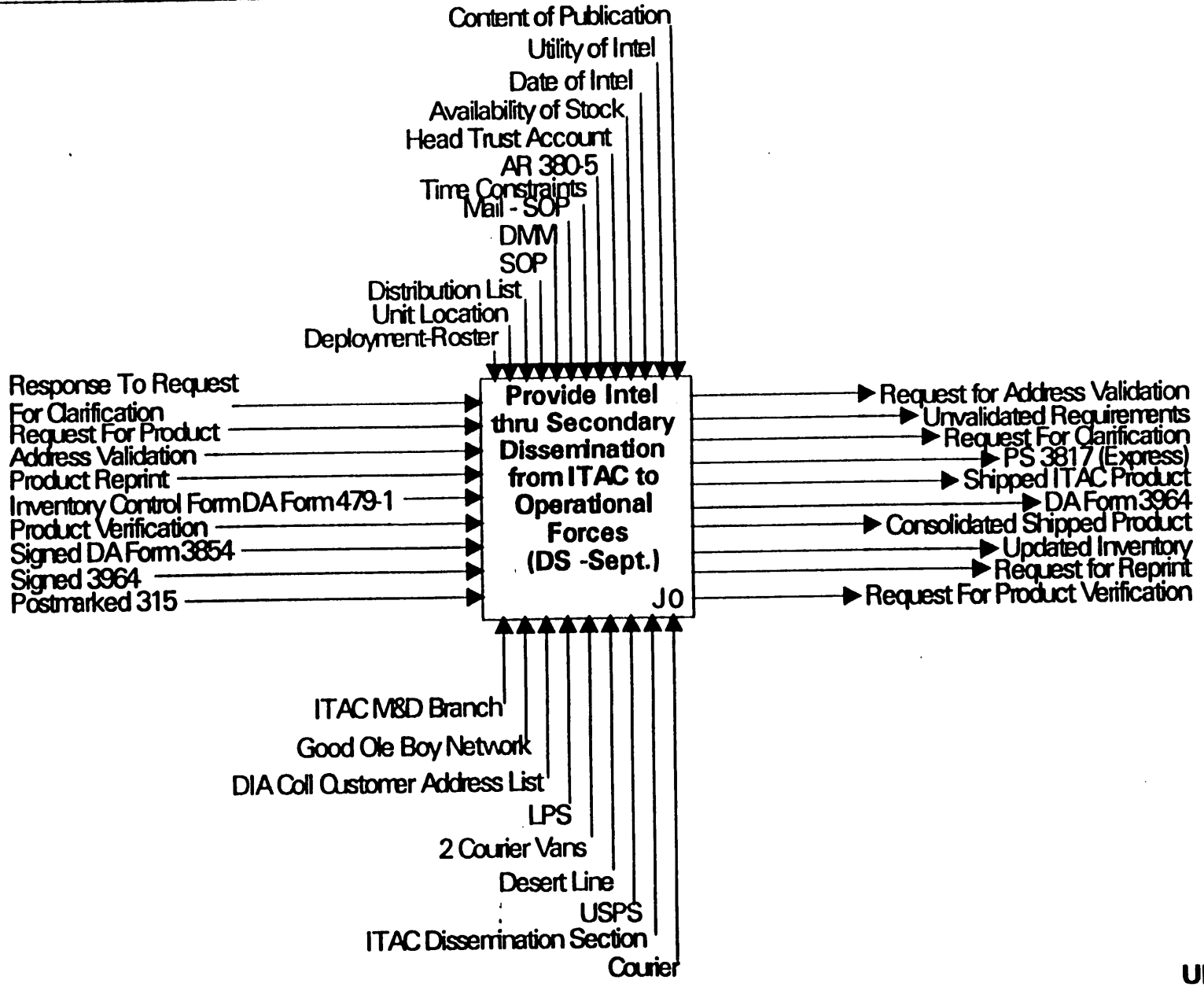

UNCLASSIFIED

NODE: J-0	TITLE: Provide Intel thru Secondary Dissemination from ITAC to Operational Forces (Desert Shield- Sept.) (U)	VIEWPOINT: ITAC

ELECTRO FILE NAME: 130216J0.IDD	AUTHOR: IPSG Working Group PROJECT IPSG: NOTES: 1 2 3 4 5 6 7 8 9 10	NEW DATE 3/92 REV DATE: 4/16/92 REV NO: #2	X	WORKING	READER DATE	JTEXT:
			X	DRAFT		
				RECOMMENDED		
				PUBLICATION		

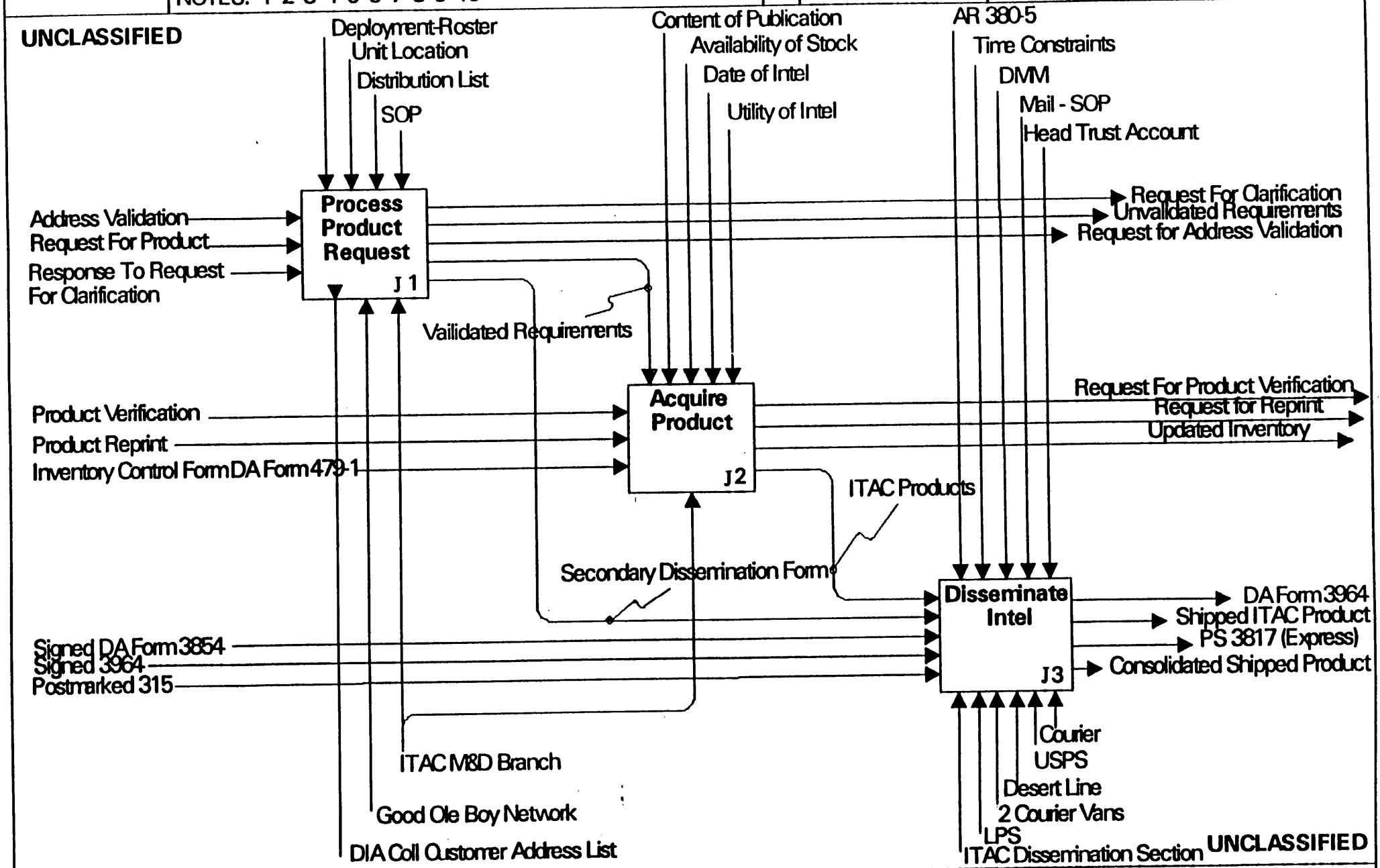

NODE: JC	TITLE: Provide Intel thru Secondary Dissemination from ITAC to Operational Forces (Desert Shield- Sept.) (U)	VIEWPOINT: ITAC

ELECTRO	AUTHOR: IPSG Working Group	NEW DATE 23/92	X	WORKING	READER	DATE	ITEXT:
FILE NAME:	PROJECT: IPSG	REV DATE: 4/16/92		DRAFT			
130216JJ.IDD		REV NO: #4		RECOMMENDED			
	NOTES: 1 2 3 4 5 6 7 8 9 10			PUBLICATION			

UNCLASSIFIED

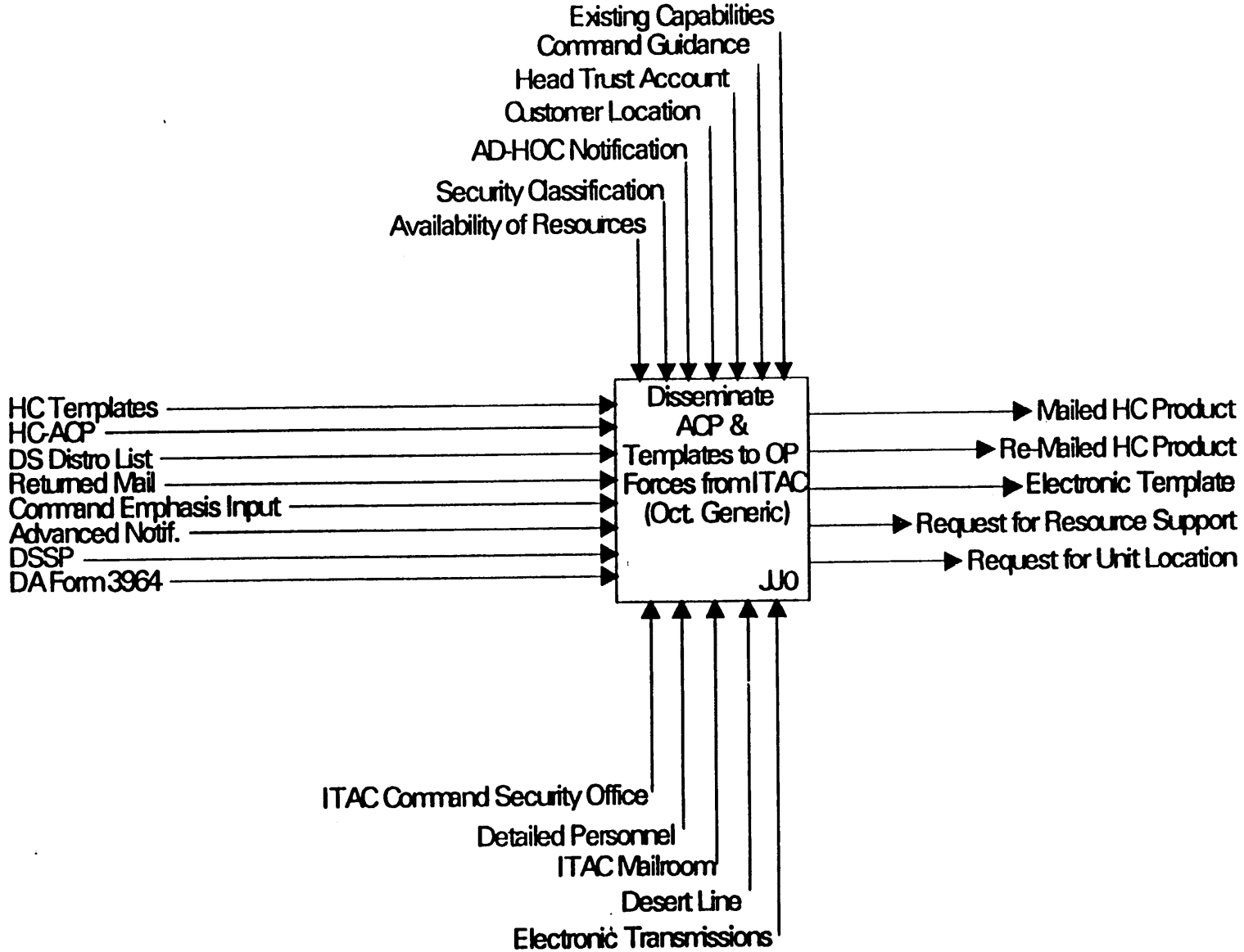

UNCLASSIFIED

NODE: JJ-0	TITLE: Disseminate ACP & Templates to Op Forces from ITAC (Oct. Generic) (U)	VIEWPOINT: ITAC

ELECTRC FILE NAME: 130216JJ.IDD	AUTHOR: IPSG Working Group PROJECT: IPSG NOTES: 1 2 3 4 5 6 7 8 9 10	NEW DATE 7/23/92 REV DATE: 4/16/92 REV NO: #4	X	WORKING	READER	DATE
				DRAFT		
				RECOMMENDED		
				PUBLICATION		

VTEXT:

UNCLASSIFIED

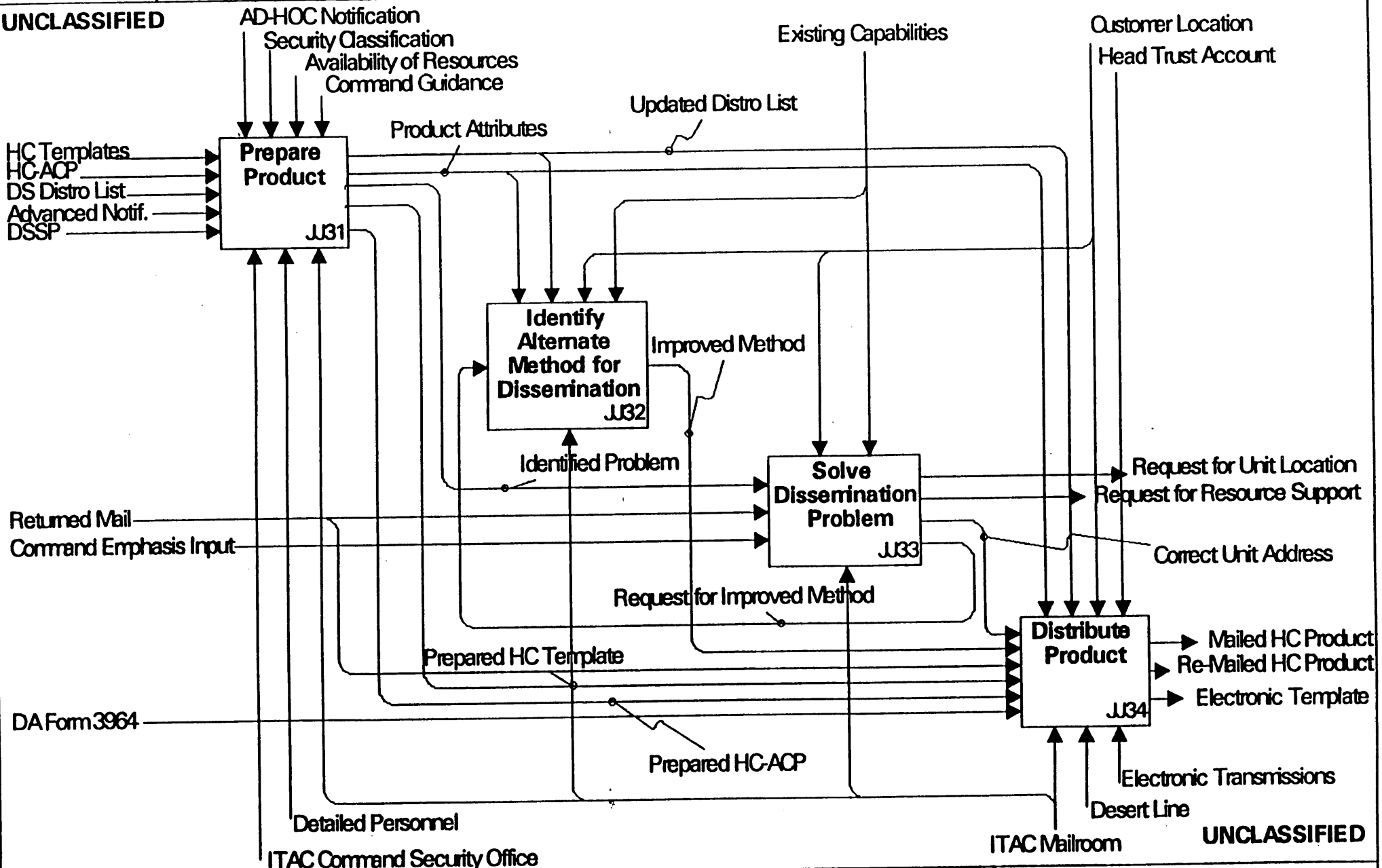

UNCLASSIFIED

NODE:	TITLE: Disseminate ACP & Templates to Op ces form ITAC (Oct. Generic) (U)	VIEWPOINT: ITAC)

ITAC
Disseminate ACP & Templates from ITAC to Operational Forces (Oct) Provide Intel thru Secondary Dissemination from ITAC to Operational Forces (Sept) (U)
Final Dictionary Report

Reference Report for: 130216JO.IDD

(U)Acquire Product
Record Type: Activity
Record Name: 3/2
Definition = In this instance "acquire product" means either go to the library and take it off the shelf; and then either locally reproduce it, copy microfiche into hard copy or vice versa, copy fiche to fiche, or request it be reprinted either internally or externally. We could also reproduce paper templates onto acetates using the OZALIP machine and vice versa or any other combination.
Creation Date = 3/24/92

(U)Ad-hoc Notification
Record Type: Control
Record Name: Ad-hoc Notification
Definition = Information received by word of mouth, usually through a third party. By the time the information was verified, it was usually incorrect, left a lot of unanswered questions and cost numerous man hours.
Creation Date = 3/24/92

(U)Address Validation
Record Type: Input
Record Name: Address Validation
Definition = Determining whether the address listed in the DIA Dissemination Customer Address List was correct.
Creation Date = 3/24/92

(U)Advanced Notification
Record Type: Input
Record Name: Advanced Notification
Definition = This was particularly beneficial to the mailroom and to the analysts. By having advanced notice the mailroom was able to procure a distribution list and print DA Form 3964s (equivalent to AF 310) and mailing labels sometimes before or while the publication was still in production. With this being accomplished, the mailroom was able to mail a product within 48 hours.
Creation Date = 3/24/92

(U)AR 380-5
Record Type: Control
Record Name: AR 380-5
Definition = This Army Regulation governs how classified material is to be handled, and specifies whether it should be couriered or mailed. It clearly states how documents are to be marked and all documentation that should accompany classified material. It illustrates how the DA Form 3964 (document accountability record) is to be filled out. The regulation specifies the different levels of security classifications and how each should be mailed out (e.g., confidential material is not required to be sent registered mail unless it is going overseas). It also states that all levels of classified material, excluding confidential should be double-wrapped (one sealed envelope inside another sealed envelope).
Creation Date = 3/24/92

(U)Availability of Resources
Record Type: Control
Record Name: Availability of Resources
Definition = During Operation Desert Shield/Desert Storm, this relates to availability of personnel, specific packaging materials required to mail out products; and improved and upgraded software programs needed to expedite the dissemination of material.
Creation Date = 3/24/92

(U)Availability of Stock
Record Type: Control
Record Name: Availability of Stock
Definition = During this period all publications pertaining to the Mid East Persian Gulf area were being rapidly depleted. We were fortunate to have recently done a 100% inventory on all pubs. We also increased the stock copies for some newly produced publications we assumed the operational forces would want. Also on hand stock copies could have been in microfiche form only. Control over the stock copy area (located in the ITAC Library) had not been firmlyestablished. Sometimes publications were removed from the shelves outside of the dissemination control procedures.
Creation Date = 3/24/92

(U)Command Emphasis Input
Record Type:Input
Record Name: Command Emphasis (U) Input
Definition = Since ITAC is both a producer and a disseminator, the command element focused a great deal of attention on both. Resources, when identified as needed, were adequately provided in timely fashion. "Resource rich" is more the rule than the exception. Having all resources under the control of one element was in itself a success step. Communication between the Command elements and the Branch was unencumbered.
Creation Date = 3/24/92

(U)Command Guidance
Record Type: Control
Record Name: Command Guidance
Definition = The art of prioritizing documents that were to be mailed. Operation Desert Storm/Desert Shield requirements were number one. There were times when the mail and distribution element had to get guidance from the command element as to what was the next most important document to be mailed. Oftentimes, the mailing of a specific product would have to be put on hold to accommodate the mailing of another document the command felt was more significant.
Creation Date = 3/24/92

(U)Consolidated Shipped Product
Record Type: Output
Record Name: Consolidated Shipped Product
Definition = Publications grouped for and packaged together for distribution by virtue of their classification and destination. By consolidating products we saved numerous dollars in registration fees. Although the postage was higher for a particular consolidated package, the registration fee for any single classified product was $4.60 regardless of weight.
Creation Date = 3/24/92

(U)Courier
Record Type: Mechanism
Record Name: Courier
Definition = Any person assigned to the mail and dissemination branch. The branch SOP requires everyone to be a courier and a driver. On some occasions, M&D was augmented with other ITAC personnel who are courierqualified. This information was readily available through the ITAC security office. Couriers, in addition to moving intelligence out of ITAC, picked up intelligence to bring into ITAC. We established twice-daily scheduled vehicle runs among the agencies within the Washington, DC metro area.
Creation Date = 3/24/92

(U)Customer Location
Record Type: Control
Record Name: Customer Location
Definition = A specific geographical point where an organization, be it headquarters or subordinate element, is physically located where it can receipt for mail. The addresses were supplied to Mail and Distribution Branch courtesy of the Defense Intelligence Agency (DIA) thru a program known as the Customer Information File (CINFO). This is the same database which produced the DIA collateral Customer Address List during Operation Desert Shield/Desert Storm. As units deployed, monitoring their addresses became harder. Sometimes DIA didn't know a unit had moved until the mail and distribution section received a returned piece of mail saying they were no longer at that location.
Creation Date = 3/24/92

(U)DA Form 3964
Record Type: Control
Record Name: DA Form 3964
Definition = The equivalent of the Air Force Form 310. This is the Classified Document Accountability Record which accompanies all classified material. It is prepared in three copies. The original is the suspense copy, the other two copies accompanying with the material. Upon receipt of the material, both copies are signed, and one is returned to the sender. The signed copy goes to the sender, at which time the suspense copy is destroyed.
Creation Date = 3/24/92

(U)Date of Intelligence
Record Type: Control
Record Name: Date of Intelligence
Definition = Sometimes the requested publication was out of date. Also the tactical situation sometimes outdated the intelligence.
Creation Date = 3/24/92

(U)Deployment-Roster

Record Type: Control

Record Name: Deployment Roster

Definition = Released through the AUTODIN message system, this document allowed us to determine the deployment status and chain of command of military units. Using this regularly published document we were able to validate a unit's requirement and deterime the quantity of material it needed.

Creation Date = 3/24/92

[redacted]

(U)Detailed Personnel

Record Type: Mechanism

Record Name: Detailed Personnel

Definition = On some occasions, the sheer bulk of a product or the amount of processing it required dictated the need for additional personnel. Once these personnel were identified, they were under the M&D NCOIC's control until the product was ready for dissemination. These augmentees required no special training or skills.

Creation Date = 3/24/92

(U)DIA Collateral Customer Address List
Record Type: Mechanism
Record Name: DIA Collateral Customer Address List
Definition = This is a database available on-line, via floppy disk, or hardcopy which reflects all the organizations and units designated by an alpha-numeric code indicating their addresses/actions. During the Gulf War, any information about a unit could change at a moment's notice. All dissemination requests had to be checked and verified among ITAC, DIA, and AIA. DIA was responsible for the accuracy of this customer list.
Creation Date = 3/24/92

(U) Disseminate Intelligence
Record Type: Activity
Record Name: 3/3
Definition = In this instance "disseminate intelligence" refers to the ITAC products we acquired in J2. Through the best available means we sent the intelligence product to the requestor.
Creation Date = 3/24/92

(U)Distribute Product
Record Type: Activity
Record Name: 4/J34
Definition = Through the selected means/method, release the product to an official agent/agency for delivery to the intended recipient.
Creation Date = 3/24/92

(U)Distribution List
Record Type: Control
Record Name: Distribution List
Definition = ITAC-produced publications have a distribution list on the last page of the document. When a requesting unit asks for one of these documents, we check that list to see if the unit may have already received a copy via the distribution list.
Creation Date = 3/24/92

(U)DMM
Record Type: Control
Record Name: DMM
Definition = This is an acronym for the Domestic Mail Manual. It is basically a Standard Operating Procedure (SOP) for the United States Postal Service (USPS). This manual explains all different classes of mail (e.g. 1st class, 2nd class, 3rd class, 4th class, and Express Mail). It also explains Special Services (Registered, Certified, Insured), specifies what can and cannot be mailed and cites current postage rates.
Creation Date = 3/24/92

(U)DS Distro List
Record Type: Input
Record Name: DS Disto List
Definition = A list showing all customers authorized to receive Operation Desert Shield/Desert Storm products. It became the official mailing list for all Operation Desert Shield/Desert Storm products. During the war ITAC, DIA, and AIA were able to reduce the number of customers on the list from over 300 to about 150.
Creation Date = 3/24/92

(U)DSSP
Record Type: Input
Record Name: DSSP
Definition = Special Study/Templates. Desert Shield Special Reports were written hardcopy reports that accompanied and explained hard copy templates. The DSSP was the product of one directorate/group and the templates were from another.
Creation Date = 3/24/92

(U)Electronic Template

Record Type: Output

Record Name: Electronic Template

Definition = These were the same templates that at first went out registered mail, then express mail, then Desert Line. This was the most efficient and expeditious means of getting critical and time sensitive material to deployed units. Once templates and the DSSRs were being transmitted electronically, Mail &Distribution Branch played no part in their dissemination. Individual analysts could put this information out automatically.

Creation Date = 3/24/92

(U)Existing Capabilities

Record Type: Control

Record Name: Existing Capability

Definition = During Operation Desert Shield/Desert Storm, Mail and Distribution Branch used a system known as Label Processing System (LAPS), this was our first automated cability to print mailing labels for inner and outer envelopes/containers and also to print the DA Form 3964 (equivalent to AF310). Just printing labels often took two days. It often broke down, and we needed special training to operate it (only 2-3 people were trained). Mail and Distribution is located on the 3rd floor; the system was located on the 5th floor. Using the LAPS System required permission from the people who owned the equipment. Labels were printed for the DA Form 3964. These labels were applied to the form and the registered mailing number was hand-written in. The whole process took about five days. The mailing system we use today is a special program we designed written in R:Base. The distribution list is incorporated into the system and mailing labels. DA Form 3964s and ITAC Form 315 R are
produced. The ITAC form 315 R is a form that accompanies the document being mailed. It is signed by the Post Office to show receipt for the document. All functions are now located in mail and distribution. The preparation process has now been cut to approximately three hours, depending on the length of the distribution list.

(U) Good Ole Boy Network
Record Type: Mechanism
Record Name: Good Ole Boy Network
Definition = In this context the network included people in the dissemination business at various echelons (e.g. DIA/AIA ITAC, etc.) whom we could call/FAX and get virtually immediate responses. This network increased processing times by an undetermined percentage because the daily requirements were enormous. Had we been forced to use a manual or paper trail, we would not have been able to meet our mission/SOP requirements. "Good Ole Boy" does not mean unofficial.
Creation Date = 3/24/92

(U)HC-ACP
Record Type: Input
Record Name: HC-ACP
Definition = The acronym ACP stands for Army Country Profile. This hard copy (HC) document is produced in five parts with no designated order of arrival. Whichever part arrived first was mailed first. There was also a time gap between the product being ready for print and actual printing. This was because they had to be printed externally. Preparation for mailing would begin and then be put on hold because of the arrival of Desert Shield/Desert Storm related products. Any ACP, when mailed to the customer for the first time includes a three inch binder, spine label, five tabs and the shrink-wrapped parts which are ready to mail. ITAC does not produce two parts of the ACP.
Creation Date = 3/24/92

(U)HC Templates
Record Type:Input
Record Name: HC Templates
Definition = A hard copy template is defined as a sheet of acetate depicting a specific area in theater where there was significant activity, structure or units. Often these arrived in the mailroom for distribution without advanced notice. Usually these templates were 3X5 and sometimes arrived in the mailroom as sets (14 sheets meant 1 set) of over 100 copies.
Creation Date = 3/24/92

(U)Head Trust Account
Record Type: Control
Record Name: Head Trust Account
Definition = An account designed to support a unit's "pay as you go" metered mailing system. The meter, which is located in the ITAC mailroom can register only about $90,000. The Head Trust Account (maintained by the 4 SPS) funds can be transferred to the meter, simply by taking the meter to the US Post Office, where the account is located once the command budgets us. During Operation Desert Shield/Desert Storm, we were funded $125,000. This money covers all express, registered , and metered mail costs.
Creation Date = 3/24/92

(U)Identify Alternate Method for Dissemination
Record Type: Activity
Record Name: 4/J32
Definition = This implies determining the best overall method: either regular mail (registered or not) express mail, courier, electronic, or fax. In this step, options are open. Other considerations are criticality, time, distance, and capability.
Creation Date = 3/24/92

(U)Improved Method
Record Type: Output/Input
Record Name: Improved Method
Definition = At the beginning of Operation Desert Shield/Desert Storm, registered mail was the only accepted method of disseminating information. As time went on and a sense of urgency was predominant, USPS Express Mail became a way to mail in CONUS. Express mail has no built-in controls for accounting for classified mail, like the registered mail system. Once or twice mail was lost and unrecovered. When Desert Line was created, mail was couriered to the Defense Intelligence Agency (DIA). This method soon became obsolete because of the transport/pack/unpack requirements at every echelon. Eventually information, particularly templates and special reports, were sent electronically.
Creation Date = 3/24/92

(U)Inventory Control Form
Record Type: Input
Record Name: Inventory Control Form
Definition = Publication and Blank Form Stock Record Card (Form 479-I). Includes document name, ATC number (ITAC publication control number), date, quantity, who requests copies and how many, and the balance of stock.
Creation Date = 3/24/92

(U)ITAC Dissemination Section
Record Type:Mechanism
Record Name: ITAC Dissemination Section
Definition = For simplicity this includes all 14 members of the Mail and Dissemination Branch. Virtually the whole section is trained; all have courier orders for all classifications; all can drive; many individuals are cross trained; physical resources are available (e.g., phones, computers).
Creation Date = 3/24/92

(U)ITAC Mailroom
Record Type: Mechanism
Record Name: ITAC Mailroom
Definition = In this instance, the mailroom is a section within the Mail and Dissemination Branch which includes the NCOIC and eight soldiers referred to in J1. These personnel are Army-trained 71L F5s. F5 indicates they are skill qualified in mail handling. The mailroom facility is resourced with everything they need to run this operation except sufficient storage space for extras like volumes of boxes, tubes, bubble wrap and / or too many publications (at the same time). However, when required, additional space was procured to accommodate these items. Some assembly/collation space for certain publications was also required and obtained.
Creation Date = 3/24/92

(U)ITAC Products
Record Type: Output/Input
Record Name: ITAC Products
Definition = Any ITAC produced publication.
Creation Date = 3/24/92

(U)LAPS
Record Type: Mechanism
Record Name: LAPS
Definition = Label Processing System. An archaic system which gave us our first opportunity to automate the production of mailing labels. The data base used to feed this system is the same as the one used for DIA Collateral Customer Address List, maintained at DIA.
Creation Date = 3/24/92

(U)Mail - SOP
Record Type: Control
Record Name: Mail SOP
Definition = The Standing Operating Procedures within the Mail and Dissemination Branch.
Creation Date = 3/24/92

(U)Mailed HC Product
Record Type: Output
Record Name: Mailed HC Product
Definition = Any ITAC publication officially transferred to another organization for delivery to the assigned/designated recipient.
Creation Date = 3/23/92

(U)Postmarked 315
Record Type: Input
Record Name: Postmarked 315
Definition = This is an ITAC-generated form. It is done in three copies. The original is a suspense copy. The other two copies go inside the sealed mailbag with the classified documents. All pieces of material, including address registered number and seal number are listed on this form. Once the sealed bag is received by the Brentwood Post Office, they open up the sealed bag. They check and verify all pieces listed against the ITAC Form 315. The Brentwood Post Office keeps a copy and sends a copy back to ITAC with a date and signature. Once we receive the signed and dated 315, the suspense copy is destroyed.
Creation Date = 3/24/92

(U)Prepare Product
Record Type: Activity
Record Name: 4/J31
Definition = In this context preparing a product includes producing an inventory of product names and descriptions, determining special packaging needs, producing mailing labels (both internal & external), collating the product, preparing the 3964, weighing the product, metering it for postage and/or registration, stamping it with classifications, packaging correct number of copies for an intended customer, verifying addresses, double-wrapping and taping (sealing all open corners), and bagging.
Creation Date = 3/24/92

(U)Prepared HC-ACP
Record Type: Output/Input
Record Name: Prepared HC ACP
Definition = Particular parts of a five part series on a particular country that was ready for dissemination to identified customers. Ready indicates collated, mailing labels affixed, 3964s prepared, boxed, stamped with classification, double wrapped, weighed and, if appropriate, registration fees and postage affixed.
Creation Date = 3/24/92

(U)Prepared HC Template
Record Type: Output/Input
Record Name: Prepared HC Template
Definition = Hard copy templates which were sorted, in mailing tubes, tops and bottoms taped with special tape, stamped with security classification, 3964s attached, double wrapped, weighed, and if appropriate, registration and postage affixed.
Creation Date = 3/24/92

(U)Process Product Request
Record Type: Activity
Record Name: 3/1
Definition = In this context "process a product request" concerns only ITAC products. We maintain stockage levels of about 50 copies of anything we publish. Often we are asked for additional copies from a unit /agency/organization. We produce for a worldwide audience, and they request these products based on their mission. The requestors can be Army, Air Force, Marine, Navy, DoD, and at any echelon within any command.
Creation Date = 3/24/92

(U)Product Attributes
Record Type:Output/Input
Record Name: Product Attributes
Definition = These attributes can best be defined as the weight, size, shape and quantity of a product. All these factors come into play to determine additional resources needed for dissemination. Storage of these items in large quantities also presented some problems.

(U)Product Reprint
Record Type: Input
Record Name: Product Reprint
Definition = Any publication, in any form, that required reproduction. It is suitable now for filling a request.
Creation Date = 3/24/92

(U)Product Verification
Record Type: Input
Record Name: Product Verification
Definition = After a request for verification was processed at the Mid East division, the dissemination section would be advised to its utility. If determined useful, we would proceed with filling the request.
Creation Date = 3/24/92

(U)PS 3817 (Express)
Record Type: Output
Record Name: PS 3817 (Express)
Definition = A United States Postal Service (USPS) form, known as the Firm Mailing Book. It is primarily used to send out express and certified mail. It is prepared in two copies, showing the article number, complete address and postage. The mailman keeps the original copy. The second copy contains the original signature, date and time. When the Brentwood Post Office receives the article, they date and sign the original PS Form 3877 and return it to ITAC.
Creation Date = 3/24/92

(U)Re-Mailed HC Product
Record Type: Output
Record Name: Re-Mailed HC Product
Definition = A document that is mailed out, returned and then mailed again to corrected unit locations. This was a common occurrence during Operation Desert Shield/Desert Storm with the rapid deployment of forces and the continuous movement of forces already deployed overseas.
Creation Date = 3/24/92

(U)Request for Address Validation
Record Type: Output
Record Name: Request for Address Validation
Definition = Through DIA/AIA we would determine if a unit was actually located where the Deployment Roster or DIA Dissemination Customer Address List designated it to be.
Creation Date = 3/24/92

(U)Request For Clarification
Record Type: Output
Record Name: Request for Clarification
Definition = Although most requests were quite specific, some were not. Requestors generally did not know what geographic area they wanted data on. Most clarifications pertained to the DIA account number and whether the requesting unit was authorized to receive the publication by virtue of the publication classification or subject matter.
Creation Date = 3/24/92

(U)Request For Product
Record Type: Input
Record Name: Request for Product
Definition = Through either a message in the AUTODIN, fax, phone call, letter, or other distribution, units would ask us to provide them a copy of what they "knew" to be an existing ITAC publication or to provide a group (any) of publications pertaining to the Mid East/Persian Gulf.
Creation Date = 3/24/92

(U)Request For Product Verification
Record Type: Output
Record Name: Request for Product Verification
Definition = The originator was asked to determine a product's "usefulness". Usually the person was still assigned to ITAC. If not, the Mid East division would be responsible to verify.
Creation Date = 3/24/92

(U)Request for Reprint
Record Type: Output
Record Name: Request for Reprint
Definition = When stock levels for publications were dwindling, requests for reprint were generated. Sometimes the request for reprint was based on the availability of the stock in a particular form (i.e.microfiche, US paper). All requests for reprint were submitted to ITAC's Intelligence Production Division. This coordination was easy because we were both under the same directorate. Any requests that had to be filled externally, ultimately caused a backlog.

(U)Request for Resource Support
Record Type: Output
Record Name: Request for Resource Support
Definition = It was apparent that the number of personnel assigned to the Mail and Distribution Section was not enough to handle the increased workload. During this time our method of mailing took from three to five days. Our section received command emphasis and soon personnel were tasked from other sections, and another automated system was designed to expedite mailing documents. All requests for support received immediate consideration.
Creation Date = 3/24/92

(U)Request for Unit Location
Record Type: Output
Record Name: Request for Unit Location
Definition = As units deployed overseas and those already overseas moved from one location to another, communication between the DIA and AIA became critical. These organizations received first-hand information as to a unit's status. This had significant impact on the distribution list and determined who received documents.
Creation Date = 3/24/92

(U)Response To Request For Clarification
Record Type: Input
Record Name: Response to Request for Clarification
Definition = Occassionally the unit, but usually DIA or AIA, would give us authority to fill a requirement. Rarely was a unit not authorized to receive material.
Creation Date = 3/24/92

(U)Returned Mail
Record Type: Input
Record Name: Returned Mail
Definition = Hard copy products that are returned to the organization, usually because of a wrong address. This was more prevalent units deployed and their addresses changed.
Creation Date = 3/24/92

(U)Secondary Dissemination Form
Record Type: Output/Input
Record Name: Secondary Dissemination Form
Definition = A form produced by the Mail and Dissemination Branch used to control documents before they were actually disseminated.
Creation Date = 3/24/92

(U)Security Classification
Record Type: Control
Record Name: Security Classification
Definition = A designation on a document or other product which indicates item is available to authorized persons only. The designation is meant to protect item or information from disclosure to unauthorized persons or to protect the source of the information.
Creation Date = 3/24/92

(U)Shipped ITAC Product
Record Type: Output
Record Name: Shipped ITAC Product
Definition = ITAC publications which have been officially transferred to another organization for delivery to the assigned/designated recipient.
Creation Date = 3/24/92

(U)Signed 3964
Record Type: Input
Record Name: Signed 3964
Definition = This is a returned receipt from the customer acknowledging receipt of a product.
Creation Date = 3/24/92

(U)Signed DA Form 3854
Record Type: Input
Record Name: Signed DA Form 3854
Definition = DA Form 3854 is the Manifold Registry Dispatch Book. This form accounts for registered mail leaving the organization. All classified material is registered. All pieces of mail are placed inside a canvas bag. It is then secured with a numbered lead seal. These are controlled items and issued byUSPS. The numbered seal is written on a DA Form 3854 and prepared in three copies. The original and third copy stay with the sealed mail bag. The second copy stays in the Dispatch Book bearing the original signature of the mail handler. Once the sealed bag is received by the Brentwood Post Office, the third copy of the DA Form 3854 is returned to ITAC with a date and signature.
Creation Date = 3/24/92

(U)Solve Dissemination Problem
Record Type: Activity
Record Name: 4/J33
Definition = The decision as to which method of dissemination best suits the product and the intended recipient within the available resources capability. Sometimes in this step, new methods are discovered, implemented, or developed.
Creation Date = 3/24/92

(U)SOP
Record Type:Control
Record Name: SOP
Definition = This is the Standing Operating Procedures within the Mail and Dissemination Branch. (U)
Creation Date = 3/24/92

(U)Two Courier Vans
Record Type: Mechanism
Record Name: Two Courier Vans
Definition = Two panel vans, commercial in design, belonging to GSA, leased for the M&D Branch, available 24 hours a day to the branch. The vans have large storage spaces for large loads or packages. (U)
Creation Date = 3/24/92

(U)Unit Location
Record Type:Control
Record Name: Unit Location
Definition = Many times the requesting unit was not located at its garrison address. Army units were often sent tothe Army's National Training Center in California before being deployed. This was true for most reserve units. Also the Marines and Navy units were often afloat. Additionally, once a unit left its garrison it would maintain a "Rear" headquarters. It was not easy to determine exactly where a unit was or how it had been subordinated in the bigger chain of command.
Creation Date = 3/24/92

(U)USPS
Record Type: Mechanism
Record Name: USPS
Definition = The United States Postal System.
Creation Date = 3/24/92

(U)Unvalidated Requirements
Record Type: Output
Record Name: Unvalidated Requirements
Definition = An unvalidated requirement does not meet either one or all of DIA/AIA/USAFTAC authorizations. This may be due to the fact that the unit already received a copy; and existing stock levels may not justify the dissemination of duplicate material. A request could also be unvalid if it does not meet the classification authorization or does not, by mission, have a need to know.
Creation Date = 3/24/92

(U)Updated Distribution List
Record Type: Output/Control
Record Name: Updated Distribution List
Definition = The initial distribution list contained many friends of friends in the Intelligence community. The list continually changed as units deployed. As this occurred, additional units were added to the list. By mid-October to early November, a standard distribution list was created for those customers having a specific need to know.
Creation Date = 3/24/92

(U)Updated Inventory
Record Type: Output
Record Name: Updated Inventory
Definition = This implies matching the actual number of available stock copies to the DA Form 479-1.
Creation Date = 3/24/92

(U)Utility of Intelligence
Record Type:Control
Record Name: Utility of Intelligence
Definition = The value and applicability of an ITAC product. Depending upon the nature of the subject matter, the date of the publication was not the primary discriminator in determining its usefulness. (e.g., A book dated in 1989 or even earlier may still beadequate in discussing particular subjects, especially when there was no other available publications on the subject. We discussed the practicality of including a note when this was the case.)
Creation Date = 3/24/92

(U)Validated Requirements
Record Type: Output/Input
Record Name: Validated Requirements
Definition = A validated requirement meets all DIA/AIA/USAITAC authorizations and is therefore considered a secondary dissemination tasking. We will fill the requirement.
Creation Date = 3/24/92

COMMANDER GROUP EIGHT SCENARIO
Produce and Disseminate MOSAIC
from Carrier Group Eight to Amphibious Afloat (Feb) (U)

"L" Diagrams

(U) The scenario occurred during the combat phase of Desert Storm, just prior to the ground campaign. Location was abroad *USS Theodore Roosevelt (CVN-71)* operating in the Central Persian Gulf. Resources (manpower, equipment, and spaces) were excellent but were not present in sufficient quantities to fulfill all tactical requirements. In the Persian Gulf, six F-14s were TARPS-configured (three on *Roosevelt*, three on *Ranger*). This number increased to ten with the arrival of *USS America*. TARPS aircraft were also present on two carriers (*Kennedy* and *Saratoga*) in the Red Sea.

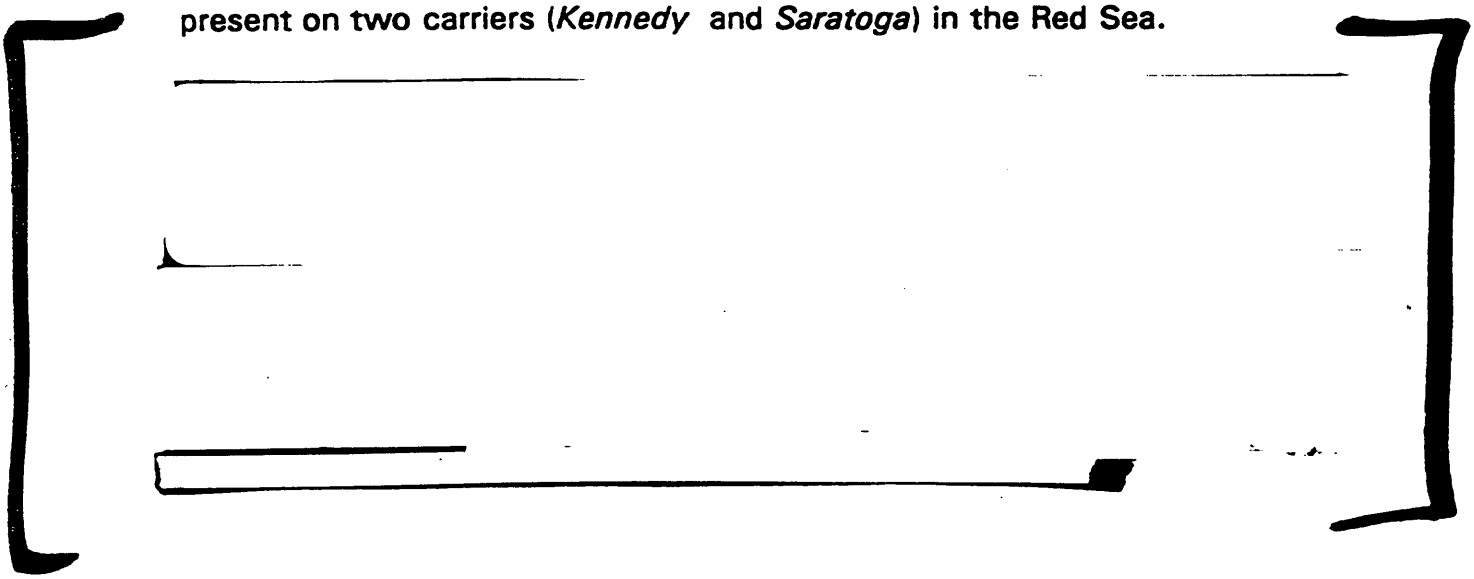

ELECTRC FILE NAME: 130216L0.IDD	AUTHOR: IPSG WORKING GROUP PROJECT: IPSG NOTES: 1 2 3 4 5 6 7 8 9 10	NEW DATE 23/92 REV DATE: 4/22/92 REV NO: #2	X	WORKING	READER DATE
				DRAFT	
				RECOMMENDED	
				PUBLICATION	

NEXT:

UNCLASSIFIED

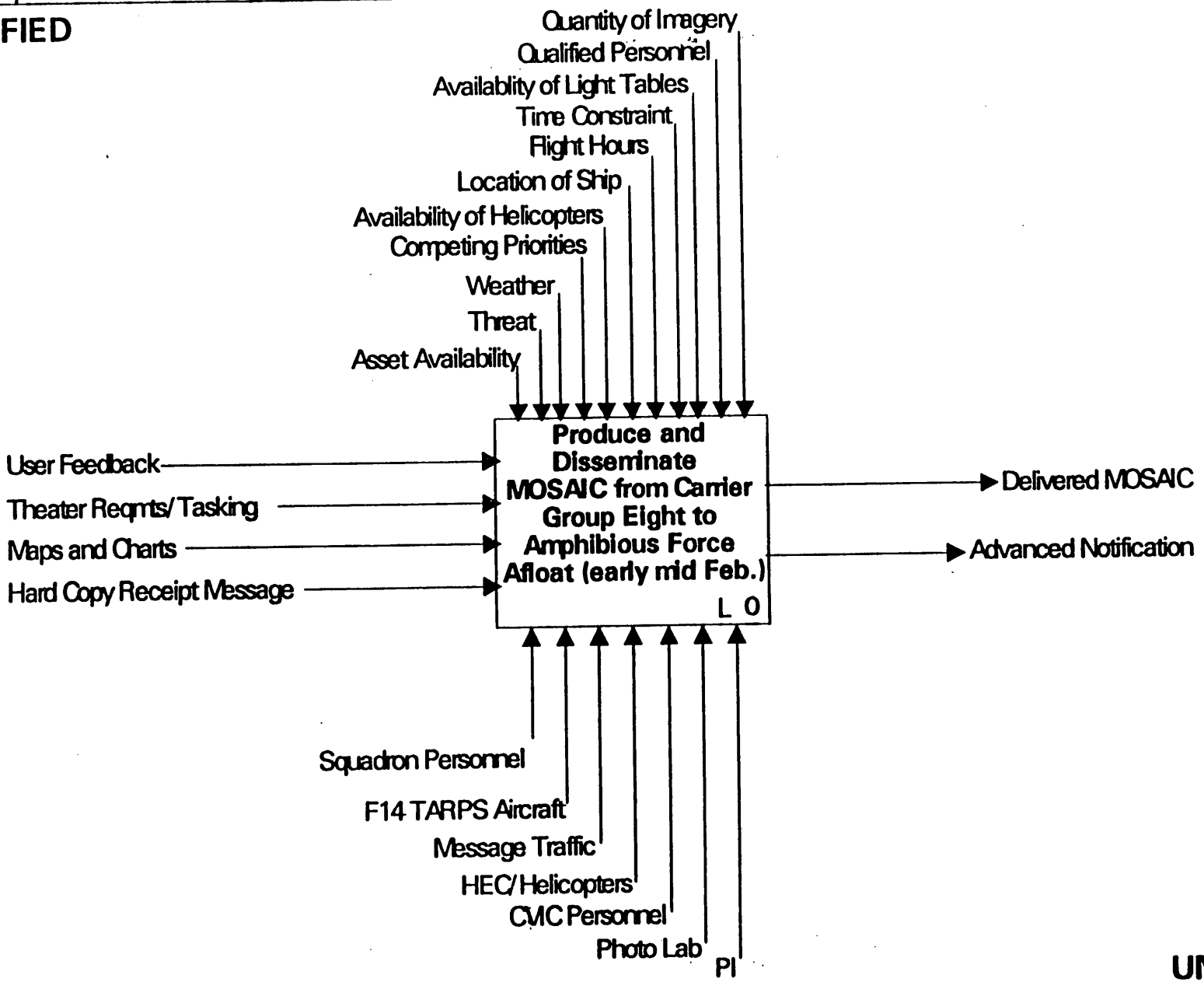

UNCLASSIFIED

NODE: L-(	TITLE: Produce and Disseminate MOSAIC from Carrier Group Eight to Amphibious Afloat (early-mid Feb.) (U)	VIEWPOINT: Commander Carrier (p Eight

ELECTRICT	AUTHOR: IPSG WORKING GROUP		X	WORKING
FILE NAME: 130216L0.IDD	PROJECT: IPSG	REV DATE: 4/22/92		DRAFT
		REV NO: #2		RECOMMENDED
	NOTES: 1 2 3 4 5 6 7 8 9 10			PUBLICATION

UNCLASSIFIED

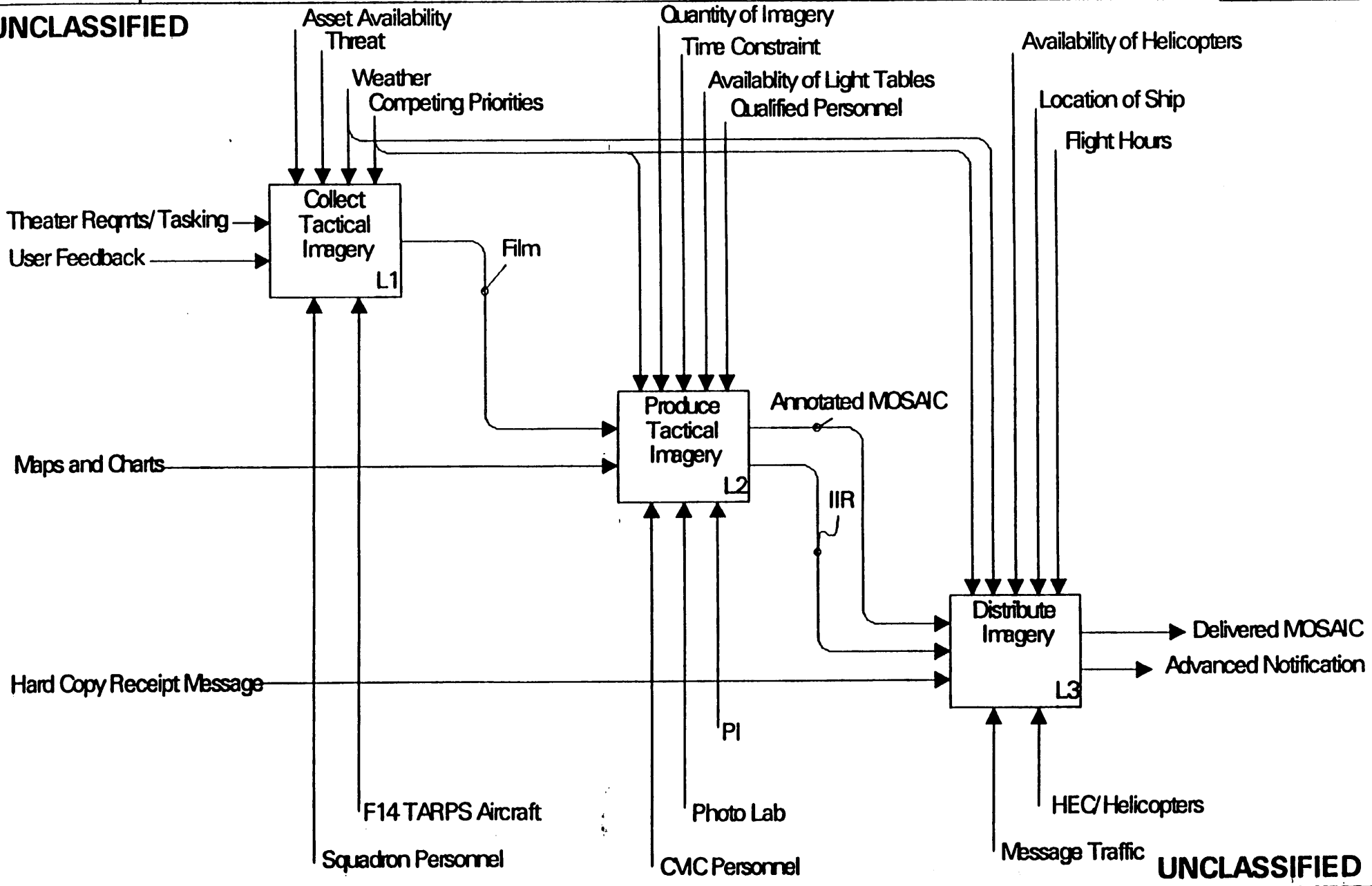

UNCLASSIFIED

NODE:	TITLE:	VIEWPOINT:
L0	Produce and Disseminate MOSAIC from Carrier Group Eight to Amphibious Afloat (early-mid Feb.) (U)	Commander Carrier Group Eight

Produce and Disseminate MOSAIC from Carrier Group Eight to Amphibious Afloat (early mid Feb.) (U) Final Dictionary Report

Reference Report for: 130216L0.IDD

(U)Advanced Notification
Record Type: Output
Record Name: Advanced Notification
Definition = To help the imagery distribution process customers were informed via tactical circuit that imagery was in route and due to arrive on a particular helo.
Creation Date = 4/22/92

(U)Annotated MOSAIC
Record Type: Output/Input
Record Name: Annotated MOSAIC
Definition = A composite picture comprised of numerous individual pictures which provides a detailed view of a specific target area. (In this instance Faylara Island). The MOSAIC must be precisely cut and placed by hand and annotated as well. Several TARPS missions were required.
Creation Date = 4/22/92

(U)Asset Availability
Record Type: Control
Record Name: Asset Availability
Definition = Navy fighter assets were heavily tasked to provide fighter escort, CAP and fleet air defense sorties. Consequently TARPs aircraft were sometimes forced to perform in a dual mission role, i.e, Fleet air defense for part of a mission and reconnaissance for the remainder. Additionally, some squadrons had problems keeping all TARPS aircraft operational (2 out of 3 was the norm).
Creation Date = 4/22/92

(U)Availability of Helicopters
Record Type: Control
Record Name: Availability of Helicopters
Definition = Helicopters were the principal means of delivering tactical imagery to Navy ships in the Persian Gulf. They were used for a host of other missions, including plane guard, search and rescue, personnel transfers, surface surveillance and logistics. The demands of some of these missions was such that the availability of helicopters to carry TARPS imagery to a specific ship in a specific timeframe was sometimes severely limited.
Creation Date = 4/22/92

(U)Availability of Light Tables
Record Type: Control
Record Name: Availability of Light Tables
Definition = The carrier deployed with two light tables (standard fit). Volume of film and requirements were such that 3 tables could have been used.
Creation Date = 4/22/92

(U)Qualified Personnel
Record Type: Control
Record Name: Qualified Personnel
Definition = A lack of properly trained imagery interpreters placed a heavy burden on a small number of personnel and slowed down the interpretation process. Flight crews planning and flying the photo missions received minimal training. (at least initially generated at reduced efficiency).
Creation Date = 4/22/92

(U)Collect Tactical Imagery
Record Type: Activity
Record Name: 3/L1
Definition = The acquisition of imagery using Navy tactical assets (primarily TARPS aircraft) in response to specific operational requirements.
Creation Date = 4/22/92

(U)CVIC Personnel
Record Type: Mechanism
Record Name: CVIC Personnel
Definition = In addition to photo interpreters, a number of other personnel working in the ship's intelligence center (CVIC) supported the imagery production process: - photo mates in the ship's photo lab- developed film. - ship's photo officer - managed photo mates and photo lab. - F-14 squadron intelligence officer (assigned to ship's intelligence center) - managed photo interpreters and ensured imagery being delivered to customers was packaged properly for distribution.
Creation Date = 4/22/92

(U)Delivered MOSAIC
Record Type: Output
Record Name: Delivered MOSAIC
Definition = Mosaic hand-delivered to the staff intelligence officer or staff operations officer.
Creation Date = 4/22/92

(U)Distribute Imagery
Record Type: Activity
Record Name: 3/L3
Definition = The delivery of both dup positive and negative imagery to specific tatical users in both the Persian Gulf and at various locations in Saudi Arabia using helo, aircraft and electronic transmission via the Fleet Imagery Support Terminal.
Creation Date = 4/22/92

(U)F14 TARPS Aircraft

Record Type: Mechanism

Record Name: F14 TARPS Aircraft

Definition = Ten F-14 aircrafts were configured to carry the Tactical Airborne reconnaisnace in the Persian Gulf (3 on Roosevelt, 3 on RANGER and 4 on America). Six additional F-14's were TARPS-capable on carriers operating in the Red Sea.

Creation Date = 4/22/92

(U)Flight Hours

Record Type: Control

Record Name: Flight Hours

Definition = On occasion, the delivery of imagery products was affected by a ship's flight hours. For example, if imagery scheduled for delivery to CINCCENT could not be prepared before flight operations secured, it would have to be transferred to another carrier for delivery.

Creation Date = 4/22/92

(U)HEC/Helicopters

Record Type: MECHANISM

Record Name: HEC/Helicopters

Definition = See "Availability of Helicopters". Because of competing requirements, a Helo Element Coordinator (HEC) was identified to coordinate helo operators and attempt to satisfy as many needs as possible.

Creation Date = 4/22/92

(U)IIR

Record Type: Ouput/Input

Record Name: IRR

Definition = Three different imagery reports were normally submitted following a mission: - a voice report based on a quick review of the film by PIs as soon as possible after the mission was completed. - a more detailed message report to NAVCENT, MARCENT and others in the chain of command. - a comprehensive imagery read__ (again by message) within 24 hours.

Creation Date = 4/22/92

(U)Location of Ship

Record Type: Control

Record Name: Location of Ships

Definition = The location of ships within the Persian Gulf affected the distribution of imagery to some customers. Amphibious units operating in the northern and southern Persian Gulf often were at the end of the imagery distribution chain.

Creation Date = 4/22/92

(U)Maps and Charts

Record Type: Input

Record Name: Maps & Charts

Definition = Both JOG (1:50, 000) and ONC charts were used to plan photo missions and help PI's in the interpretation process. Land features, forms, cities and historic sites were used as reference points to help locate enemy equipment etc. Imagery interpretation and annotation would be much more difficult without accurate maps and charts.

Creation Date = 42292

(U)Message Traffic
Record Type: Mechanism
Record Name: Message Traffic
Definition = Used to report imagery - derived information, and coordinate imagery planning / distribution matters.
Creation Date = 4/22/92

(U)Photo Lab
Record Type: Mechanism
Record Name: Photo Lab
Definition = Self explanatory. On Roosevelt the lab was well equipped, supplied and staffed.
Creation Date = 4/22/92

(U)PI
Record Type: Mechanism
Record Name: Photo Interpreter
Definition = USS Theodore Roosevelt sailed with two PI's. Under normal circumstances this would have been sufficient. However, the volume of imagery collected and the fact that most was devoted to land targets (vice ships/coastal targets) made it necessary to augment ships PI's with two marine photo interpreters. Their training was better suited to the types of targets being imaged then the Navy PI's training. As a result they carried a disproportionate amount of the workload.
Creation Date = 4/22/92

(U)Produce Tactical Imagery
Record Type: Activity
Record Name: 3/L2
Definition = Includes the development of film and the appropriate photo interpretation / annotation.
Creation Date = 4/22/92

(U)Quantity of Imagery
Record Type: Control
Record Name: Quantity of Imagery
Definition = The requirement to map routes and produce MOSAIC's generated a quantity of imagery that was an order of magnitude greater than normally processed on the carrier.
Creation Date = 4/22/92

(U)Squadron Personnel
Record Type: Mechanism
Record Name: Squadron Personnel
Definition = Squadron flight crews and intelligences officers planned and executed the photo missions. Maintenance personnel were required to keep the cameras and TARPS PODS in operating order.
Creation Date = 4/22/92

(U)Theater Reqmts/Tasking
Record Type: INPUT
Record Name: Theater Requirements/Tasking
Definition = Theater requirements came primarily from NAVCENT and MARCENT and initially involved wrapping coastal areas south of Kuwait City to support amphibious operational planning. As the war progressed, TARPS assets were tasked to map potential avenues of attack to support MARCENT's role in the ground campaign and occupied island, such as Faylanka, for potential amphibious operations. TARPS was also tasked to monitor changes in Iraqi coastal defense systems and provide pre- and post -strike BDA.
Creation Date = 4/22/92

(U)Threat
Record Type: CONTROL
Record Name: Threat
Definition = The type and amount of surface to air missile systems present in Iraq forced the majority of TARPS aircraft to be flown above 18K ft. This was considerably higher than the altitude regime TARPS was optimized to perform in and affected the quality of imagery provider.
Creation Date = 4/22/92

(U)Time Constraint
Record Type: Control
Record Name: Time Constraint
Definition = The rapid pace of operations placed a burden on the information management system to deliver all forms of data (including imagery) as quickly as possible. (See IIR comments).
Creation Date = 4/22/92

(U)User Feedback
Record Type: Input
Record Name: User Feedback
Definition = There was a standing requirement for consumers to provide feedback on the quality / utility of imagery. Feedback was provided on the form of hard copy message traffic.
Creation Date = 4/22/92

(U)Weather
Record Type: CONTROL
Record Name: Weather
Definition = Smoke, haze and cloud cover required most TARPS missions to be flown between 1000-1500 and forced many scheduled missions to be cancelled. This was particularly true in the Gulf, where weather conditions were more severe than in the Red Sea/Western Iraq.
Creation Date = 4/22/92

ELECTRC FILE NAME. 130216M1.IDD	AUTHOR: IPSG Working Group PROJECT: IPSG NOTES: 1 2 3 4 5 6 7 8 9 10	NEW DATE: 5/ 92 REV DATE: 4/ 16/92 REV NO: #5 2pm	X	WORKING	READER DATE
				DRAFT	
				RECOMMENDED	
				PUBLICATION	

UNCLASSIFIED

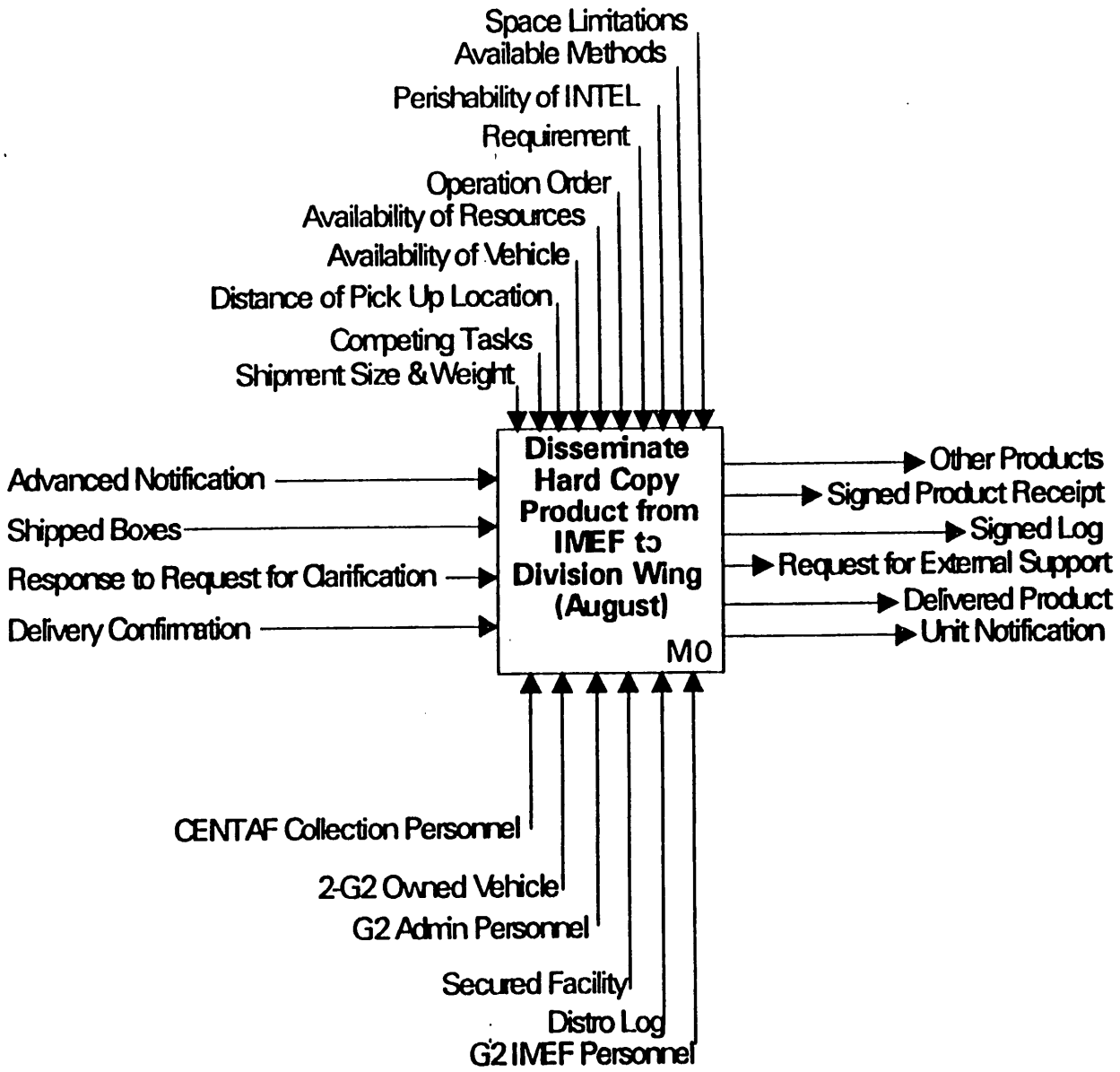

UNCLASSIFIED

NODE: M-0	TITLE: Disseminate Hard Copy Product from IMEF to Division Wing (August) (U)	VIEWPOINT: IMEF

ELECTRON	AUTHOR: IPSG Working Group	NEW DATE: (3/92	X	WORKING	READER DATE (TEXT:
FILE NAME:	PROJECT: IPSG	REV DATE: 4/16/92		DRAFT	
130216M1.IDD		REV NO: #5 2pm		RECOMMENDED	
	NOTES: 1 2 3 4 5 6 7 8 9 10			PUBLICATION	

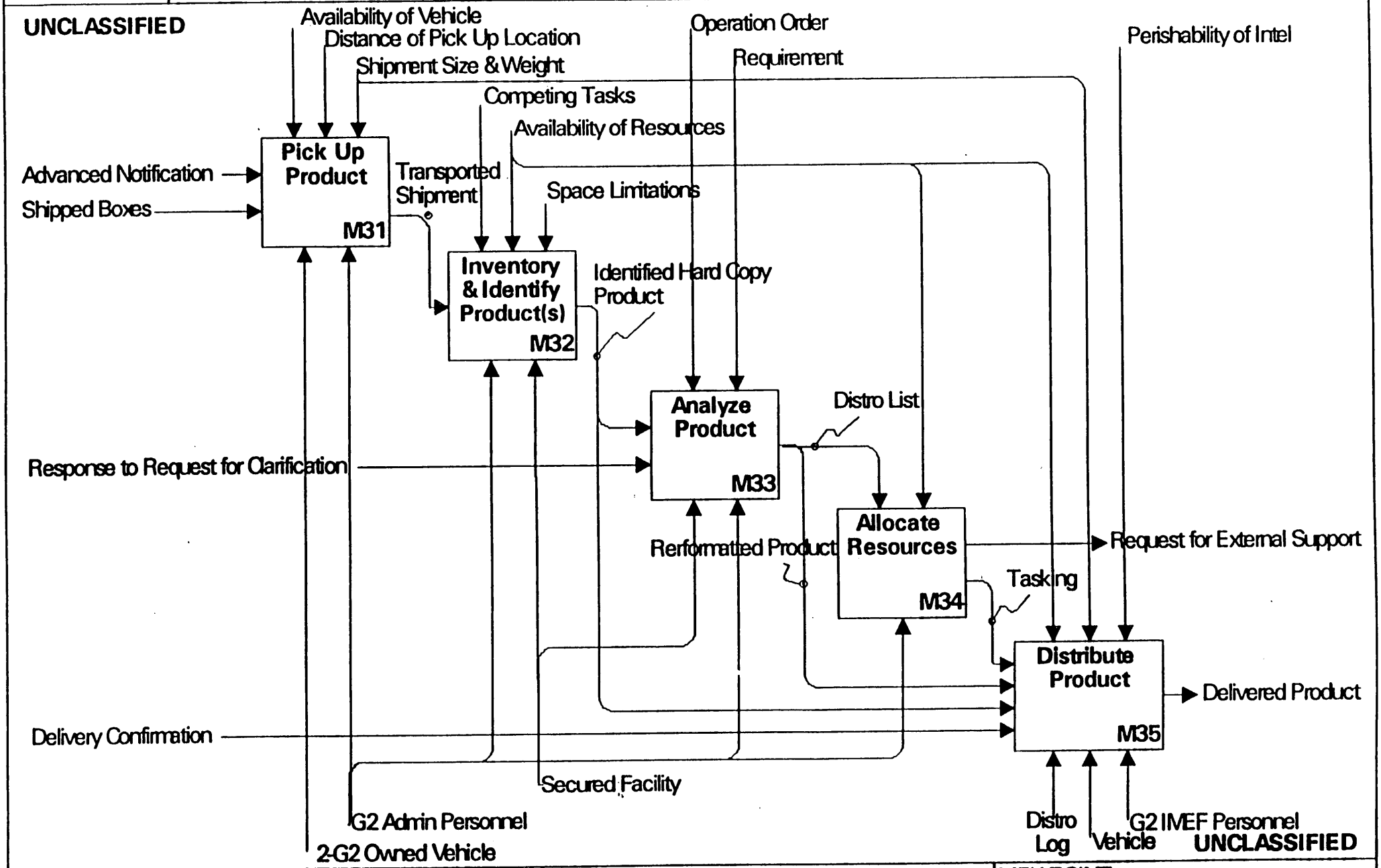

NODE: M3	TITLE: Disseminate Hard Copy Product from IM[illegible] Division Wing (August) (U)	VIEWPOINT: IMEF

IMEF
Disseminate Hard Copy Product from IMEF to Division Wing (August) (U)
Final Dictionary Report

Reference Report for: 130216M1.IDD

(U)2-G2 Owned Vehicle
Record Type: Mechanism
Record Name: 2 G2 Owner Vehicle
Definition = HUMMV (Truck) Exclusively dedicated for G2 Use.
Creation Date = 3/12/92

(U)Advanced Notification
Record Type: Input
Record Name: Advanced Notification
Definition = Prior knowledge of the arrival time and location of a product.
Creation Date = 3/12/92

(U)Allocate Resources
Record Type: Activity
Record Name: 3/M34
Definition = Process of assigning assets to a task.
Creation Date = 3/12/92

(U)Availability of Resources
Record Type: Control
Record Name: Availability of Resources
Definition = The means you have available to distribute your product.
Creation Date = 3/12/92

(U)Availability of Vehicle
Record Type: Control
Record Name: Availability of Vehicle
Definition = Required means of transportation is/is not on hand to deliver product.
Creation Date = 3/12/92

(U)Competing Tasks
Record Type: Control
Record Name: Competing Tasks
Definition = Extra assignments requiring attention which detract from the time you have available for dissemination.
Creation Date = 3/12/92

(U)Delivered Product
Record Type: Output
Record Name: Delivered Product
Definition = Product received by customer.
Creation Date = 3/12/92

(U)Delivery Confirmation
Record Type: Input
Record Name: Delivery Confirmation
Definition = Feedback either orally or by receipt from customer stating product has been received.
Creation Date = 3/12/92

(U)Distance of Pick Up Location
Record Type: Control
Record Name: Distance of Pick Up Location
Definition = Distance you have to travel from your location to the location where the product is to be picked up.
Creation Date = 3/12/92

(U)Distribute Product
Record Type: Activity
Record Name: 3/M35
Definition = Physical act of getting a product from your location to an end user.
Creation Date = 3/12/92

(U)Distribution List
Record Type: Output/Control
Record Name: Distribution List
Definition = List of customers who need to receive product.
Creation Date = 3/12/92

(U)Distribution Log
Record Type: Mechanism
Record Name: Distribution Log
Definition = Log book identifying subject matter of material sent; number of copies; date received; and recipients name. Used for internal control.
Creation Date = 3/12/92

(U)G2 Admin Personnel
Record Type: Mechanism
Record Name: G2 Admin Personnel
Definition = Personnel working within the administrative section of the B2 (intelligence) section.
Creation Date = 3/12/92

(U)Inventory & Identify Product(s)
Record Type: Activity
Record Name: 3/M32
Definition = The process by which you determine what products you have and their alternate distribution.
Creation Date = 3/12/92

(U)Operation Order
Record Type: Control
Record Name: Operation Order
Definition = A directive issued by the commander to his subordinates for the purpose of effecting the coordinated

execution of an operation. It states the situation, mission, the commanders decision, his plan of action, and detailed method of execution.
Creation Date = 3/12/92

(U)Perishability of Intel
Record Type: Control
Definition = The period of time which an intelligence project is useful.
Creation Date = 4/17/92

(U)Pick Up Product
Record Type: Activity
Record Name: 3/M31
Definition = The physical act of taking receipt of a product.
Creation Date = 3/12/92

(U)Request for External Support
Record Type: Output
Record Name: Request For External Support
Definition = Asking for personnel and/or equipment support from someone outside your chain of command.
Creation Date = 3/12/92

(U)Requirement
Record Type: Control
Record Name: Requirement
Definition = Something that needs to be accomplished.
Creation Date = 3/12/92

(U)Secured Facility
Record Type: Mechanism
Record Name: Secured Facility
Definition = Location meeting security requirements for receipt, storage and handling of classified material.
Creation Date = 3/12/92

(U)Shipped Boxes
Record Type: Input
Record Name: Shipped Boxes
Definition = Form in which products may be received; other forms could be packages, pallets, etc.
Creation Date = 3/12/92

(U)Space Limitations
Record Type: Control
Record Name: Space Limitation
Definition = Constraint on work area availability.

(U)Tasking
Record Type: Output/Input
Record Name: Tasking
Definition = Assignment of responsibility.
Creation Date = 3/12/92

DMA Scenario
Produce & Disseminate Maps & Charts from DMA to Unit (Nov.-Dec.) (U)
"P" Diagrams

(U) The model shown for distribution/dissemination of maps and charts portrays the period December 1990-January 1991 when DMA conducted a massive effort to produce new or updated products over the Kuwait Theater of Operations. This effort continued unabated until the commencement and rapid conclusion of the ground campaign.

(U) The DMA effort was orchestrated, in large measure, through its Operations Center. The Logistics Readiness Call (LRC) of that Operations Center was specifically tasked to oversee the distribution of maps and charts. Thus, the LRC instituted close-tracking methods to control and monitor the flow of maps and charts from the DMA production centers, through various transportation nodes, to the Theater Map Depot (TMD). The monitoring of map distribution extended to the first major receiving level below the TMD (Army corps, Air Force wings, Navy ships, etc.). The TMD was located in Bahrain and was operated under the control of DMA personnel who were, in turn under the operational control of USCENTCOM. The TMD was heavily augmented by DMA personnel, USCENTCOM components, and the United Kingdom. Maximum personnel levels seldom exceeded 40.

(U) DMA had excellent telecommunications connectivity at all levels, including the TMD. These included secure and unsecured phones (fixed and mobile), modems, faxes, WWMCCS (Headquarters DMA only), and radio (TMD only). The only significant communications problem was the use of modems to transmit inventory data between the TMD and Headquarters DMA. This problem is related to non-US standards for baud-rate transmission, and was largely solved by using more compatible equipment.

(U) The majority of problems experienced within the map distribution system centered around personnel augmenting the TMD. The Army reserve map distribution platoon trained for the mission was substituted by another unit by FORSCOM. The substitute unit was poorly trained and unprepared for the rigors of TMD operations. Because of this situation, DMA deployed additional personnel and augmentees had to be sought from other USCENTCOM components and the United Kingdom. In addition to the personnel issue, the originally assigned material handling equipment at the TMD proved inadequate. This was quickly solved by deploying replacement equipment.

ELECTROI FILE NAME: 130216P1.IDD	AUTHOR: IPSG Working Group PROJECT: IPSG NOTES: 1 2 3 4 5 6 7 8 9 10	NEW DATE: 3/92 REV DATE: 4/16/92 REV NO: #2	X	WORKING	READER DATE
				DRAFT	
				RECOMMENDED	
				PUBLICATION	

UNCLASSIFIED

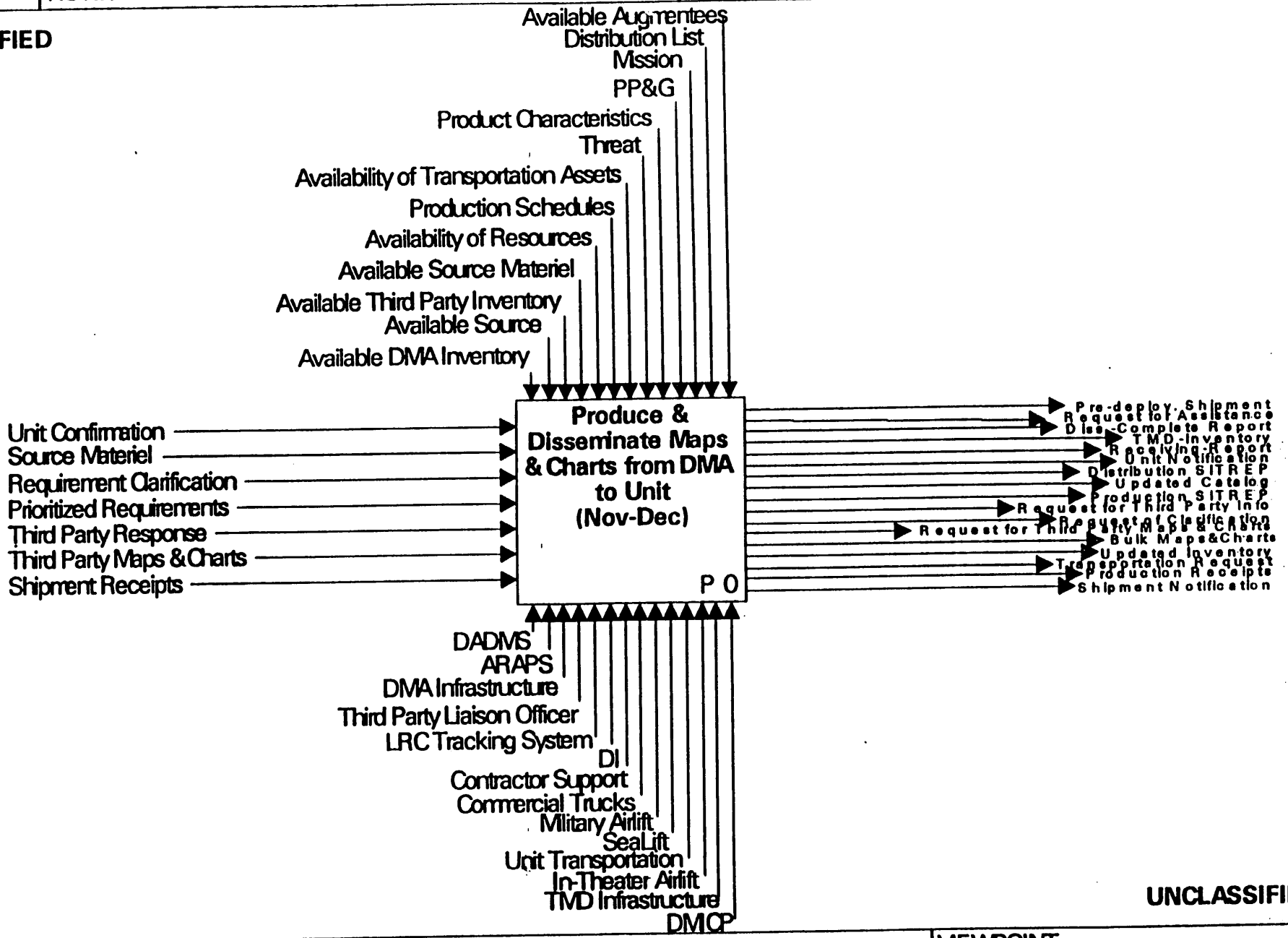

UNCLASSIFIED

NODE:	TITLE:	VIEWPOINT:
P	Produce &Disseminate Maps &Charts from A to Unit (Nov-Dec) (U)	DMA

ELECTRC
FILE NAME.
130216P1.IDD

AUTHOR: IPSG Working Group
PROJECT: IPSG

NOTES: 1 2 3 4 5 6 7 8 9 10

REV DATE: 4/ 16/92
REV NO: #2

X	WORKING	RELEASED
	DRAFT	
	RECOMMENDED	
	PUBLICATION	

UNCLASSIFIED

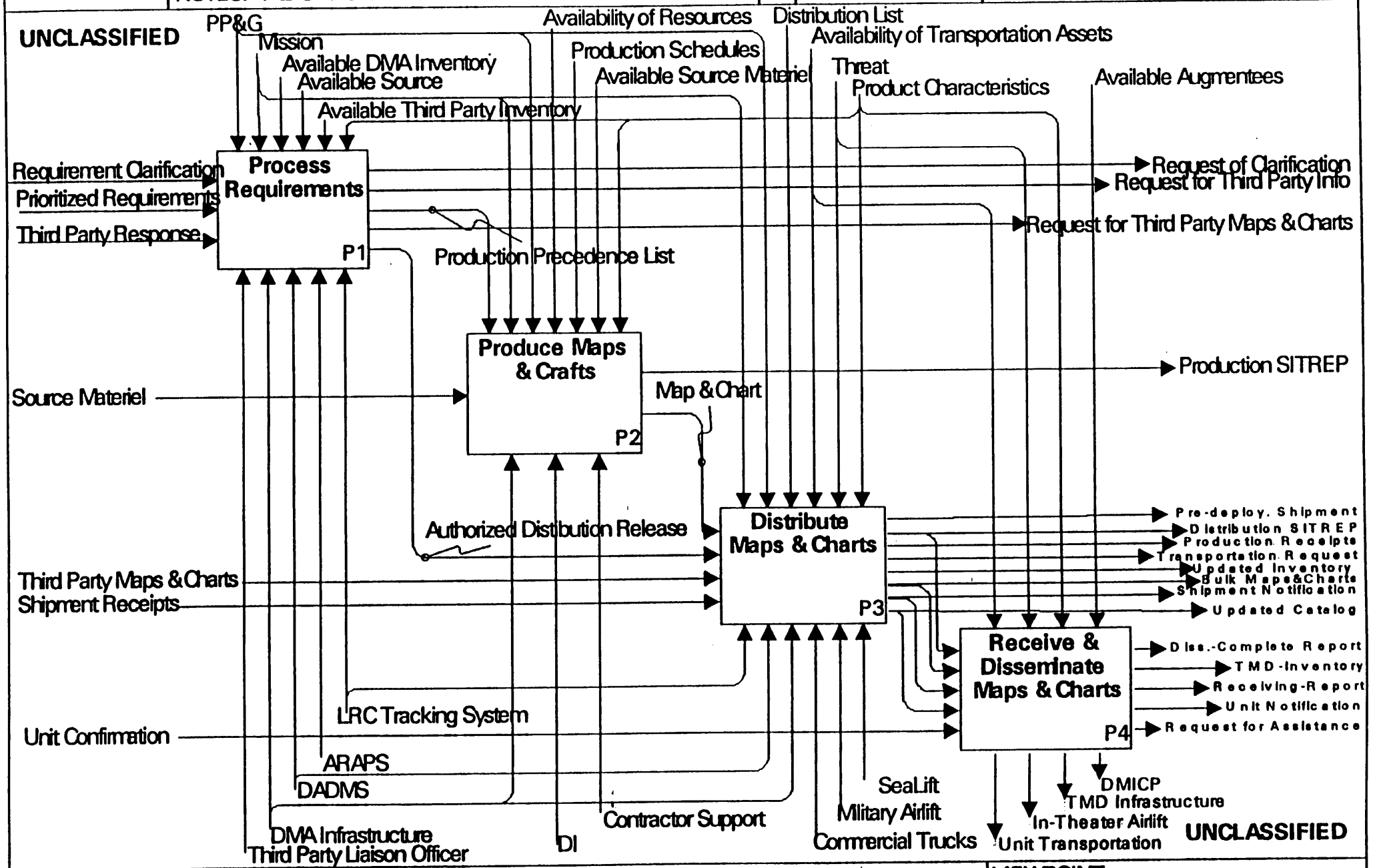

UNCLASSIFIED

NODE:	TITLE:	VIEWPOINT:
P0	Produce & Disseminate Maps & Charts from DMA to Unit (Nov-Dec) (U)	DMA

DMA
Produce & Disseminate Maps & Charts from DMA to Unit (Nov-Dec)
Final Dictionary Report (U)

Reference Report for:130216P1.IDD

(U)ARAPS
Record Type: Mechanism
Record Name: ARAPS
Definition = Area Requirement and Priority System (AARPS) used by DMA to prioritized all command requirements for new and updated mapping and charting.
Creation Date = 4//07/92

(U)Availability of Transportation Assets
Record Type: Control
Record Name: Availability of Transporation Assets
Definition = The availability of airplanes, ships, material handling equipment and/or trucks to move MC&G products from production centers to the Theater Map Depot (TMD).
Creation Date = 4/07/92

(U)Available Augmentees
Record Type: Control
Record Name: Availability of Augmentees
Definition = Availability of augmentees provided by components (ARCENT, CENTAF, MARCENT, NAVCENT) and allies (UK) to help receive and disseminate maps and charts at the TMD.
Creation Date = 4/07/92

(U)Available Source
Record Type: Control
Record Name: Available Source
Definition = The availability of adequate source materials (e.g. stereo imagery, geodetic controls, geographic names, etc.) needed by DMA to compile and produce a new or updated MC&G product.
Creation Date = 4/07/92

(U)Available Third Party Inventory
Record Type: Control
Record Name: Available Third Party Inventory
Definition = The availability of adequate products from a third party, which could be provided to DMA to fulfill a CENTCOM requirement.
Creation Date = 4/07/92

(U)Bulk Maps&Charts
Record Type: Output
Record Name: Bulk Maps & Charts
Definition = The shipment of an MC&G product by air, sea, or land to an intermediate or final destination.
Creation Date = 4/07/92

(U)Commercial Trucks
Record Type: Mechanism
Record Name: Commercial Trucks
Definition = Commercial (contract) trucks used to move DMA products from production centers to intermediate CONUS locations.
Creation Date = 4/07/92

(U)DADMS
Record Type: Mechanism
Record Name: DADMS
Definition = DMA Automated Distribution Management System (DADMS). Serves as the order entry, inventory, and manifesting system.
Creation Date = 4/07/92

(U)Diss.-Complete Report
Record Type: Output
Record Name: Dissemination Complete Report
Definition = Advisory sent by TMD to DMA and CENTCOM advising that new/updated maps and charts have been disseminated and received by the first-level at each components.
Creation Date = 4/07/92

(U)Distribute Maps & Charts
Record Type: Activity
Record Name: 4/P3
Definition = Receiving, controlling, inventorying, storing, packing, and shipping MC&G products at the right time to support US military operations.
Creation Date = 4/07/92

(U)Distribution List
Record Type: Control
Record Name: Distribution List
Definition = List developed by CENTCOM to indicate authorized units and quantities required for each MC&G product. Used by Theater Map Depot (TMD) to automatically distribute new/updated products as soon as they arrived in the theater.
Creation Date = 4/07/92

(U)DMA Infrastructure
Record Type: Mechanism
Record Name: DMA Infrastructure
Definition = Personnel, equipment, facilities, and supplies available to DMA to accomplish its mission.
Creation Date = 4/07/92

(U)DMICP
Record Type: Mechanism
Record Name: DMICP
Definition = DMA Inventory Control Program for non-automated depots.
Creation Date = 4/07/92

(U)In-Theater Airlift
Record Type: Mechanism
Record Name: In-theater Airlift
Definition = CENTCOM controlled airlift used to transport MC&G products and other supplies.
Creation Date = 4/07/92

(U)Military Airlift
Record Type: Mechanism
Record Name: Military Airlift
Definition = Airlift controlled by Military Airlift Command (MAC) component of TRANSCOM. (MAC is now Air Mobility Command (AMC))
Creation Date = 4/07/92

(U)Pre-deploy. Shipment
Record Type: Output
Record Name: Pre-deployment Shipment
Definition = Shipment of maps and charts to a unit prior to deployment, while underway, or to an in route location.
Creation Date = 4/07/92

(U)Prioritized Requirements
Record Type: Input
Record Name: Prioritized Requirements
Definition = CENTCOMs prioritized list of MC&G product requirements, by series, sheet, quantity, and required delivery date.
Creation Date = 4/07/92

(U)Process Requirements
Record Type: Activity
Record Name: 4/P1
Definition = The DMA process to review, assess, and validate the command's requirement for specific products, quantities, and required delivery dates.
Creation Date = 4/07/92

(U)Produce Maps & Charts
Record Type: Activity
Record Name: 4/P2
Definition = The compiling and producing of MC&G products from source materials (e.g. - imagery, geodetic control, geographic names, etc.)
Creation Date = 4/07/92

(U)Product Characteristics
Record Type: Control
Record Name: Product Characteristic
Definition = Characteristics of a product include the material (paper or tyvek), classification, sizes, colors, and folding/packaging requirements.
Creation Date = 4/06/92

(U)Production Precedence List
Record Type: Output/Control
Record Name: Production Precedence List
Definition = The CENTCOM requirement priorities, current inventories, and the availability of adequate source materials were accessed to determine the order in which DMA could produce new/updated maps and charts and reprint shortages.
Creation Date = 4/07/92

(U)Production Receipts
Record Type: Output
Record Name: Production Receipts
Definition = Notification that a product has been received and accepted for distribution and is added to the inventory.
Creation Date = 4/07/92

(U)Receive & Disseminate Maps & Charts
Record Type: Activity
Record Name: 4/P4
Definition = Receive bulk shipments of maps and charts; breakdown and disseminate to first major level major level in components (CENTAF-wings, - ARCENT-Corps; MARCENT - division; NAVCENT-ship)
Creation Date = 4/07/92

(U)Receiving-Report
Record Type: Output
Record Name: Receiving Report
Definition = Report sent by Theater Map Depot (TMD) indicating the maps & charts (products, editions, and quantities) received at the TMD.
Creation Date = 4/07/92

(U)Request for Assistance
Record Type: Output
Record Name: Request for Assistance
Definition = Request sent by the Theater Map Depot (TMD) asking for assistance from DMA or CENTCOM (e.g. - request for augmentees, etc.)
Creation Date = 4/07/92

(U)Request of Clarification
Record Type: Output
Record Name: Request For Clarification
Definition = Request from DMA to CENTCOM concerning the requirement for a particular product, product characteristics desired, quantities needed, or required delivery dates.
Creation Date = 4/07/92

(U)Requirement Clarification
Record Type: Input
Record Name: Requirement Clarification
Definition = Additional information provided by CENTCOM at the request of DMA, intended to clarify the requirement for a specific product, quantity, or required delivery date.
Creation Date = 4/07/92

(U)SeaLift
Record Type: Mechanism
Record Name: Sealift
Definition = Sealift controlled by Military Sealift Command component of TRANSCOM.
Creation Date = 4/07/92

(U)Shipment Notification
Record Type: Output
Record Name: Shipment Notification
Definition = Notification to intermediate destinations, Theater Map Depot (TMD) and CENTCOM, that specific products have been shipped.
Creation Date = 4/07/92

(U)Third Party Liaison Officer
Record Type: Mechanism
Record Name: Third Party Liaison Officer
Definition = Third Party Officer assigned to DMA to assist in resolving requirements, production, and distribution questions.
Creation Date = 4/07/92

(U)Third Party Response
Record Type: Input
Record Name: Third Party Response
Definition = Response to DMA from third party concerning the availability or intended production of MC&G products.
Creation Date = 4/07/92

(U)Threat
Record Type: Control
Record Name: Threat
Definition = The perceived military or terrorist threat at transportation and distribution nodes.
Creation Date = 4/07/92

(U)TMD Infrastructure
Record Type: Mechanism
Record Name: TMD Infrastructure
Definition = Assigned personnel, equipment, supplies, and facilities.
Creation Date = 4/07/92

(U)TMD-Inventory
Record Type: Output
Record Name: TMD Inventory
Definition = Report indicating all products, editions, and quantities currently available at the Theater Map Depot (TMD).
Creation Date = 4/07/92

(U)Unit Confirmation
Record Type: Input
Record Name: Unit Confirmation
Definition = Confirmation by major units that they have picked up or received their maps and charts.
Creation Date = 4/07/92

(U)Unit Notification
Record Type: Output
Record Name: Unit Notifications
Definition = Specific notification by Theater Map Depot (TMD) to a unit that maps and charts are packaged and awaiting pickup by the unit.
Creation Date = 4/07/92

(U)Unit Transportation
Record Type: Mechanism
Record Name: Unit Transportation
Definition = Unit land and air transportation assets used to come to the TMD and pickup MC&G products.
Creation Date = 4/07/92

CENTAF SCENARIO
Initiate Production & Disseminate Imagery from CENTAF to WING (NOV) (U)

"S" Diagrams

(U) During Operation Desert Shield, five CENTAF personnel were assigned to the collection cell. Only two of the five personnel were actually CENTAF collection managers. The collections area initially revolved around one small table in the RSAF ACOC area. INC moved locations four times prior to the start of the war. Because of the enormous demand for imagery and analysis, which gradually occurred with the buildup for Operation Desert Storm, the RFI section of INC joined with a team of imagery analysts to become CENTAF/INP three weeks into the air campaign.

(U) RFI's were handled initially on an ad hoc basis by various collection management personnel; the numbering system used to track RFI's was already developed prior to deployment but had to be revised several times in order to establish a workable program. The CENTAF/INP RFI number used to track requests was left off the incoming products making it difficult to match up imagery received and the requestor needing the information. Requestors failed to assign realistic priorities to RFI's. By making every RFI a priority #1, INP's task was to establish realistic priorities and alleviate a production backlog caused by an overload on the production facilities. Hampering this effort was the fact that many "special targeting cells" existed and INP personnel did not have access to the overall picture.

(U) Imagery transmission capability was provided by Tactical Digital Facsimile (TDF), Imagery Communications Network (ICN) and Courier Deliveries. TDF's provided capability to rapidly transmit and receive imagery and information to/from all deployed elements. The ability to quickly transmit this information was critically important. However, the system had two drawbacks:

1) The poor line quality when compounded with the sometimes poor image quality caused the quality of the imagery to be degraded to the point where its usefulness was highly questionable.

2) The TDF's were connected via KY-68's which can only pass collateral information/imagery. This caused problems in the timely transmission of SCI information imagery.

(U) Courier deliveries provided high quality imagery and information to the theater from nondeployed units (e.g., the 480th, TIG, DIA, and the 497th RTG). Timeliness was the chief problem with this system of providing/transmitting imagery. The imagery could not be provided in time to assist the targeteers and aircrews during the mission planning cycle.

ELECTRC	AUTHOR: IPSG Working Group	NEW DATE: 2/3/92	X	WORKING	READER DATE
FILE NAME:	PROJECT: IPSG	REV DATE: 4/14/92		DRAFT	
130216S1.IDD		REV NO: #5 10am		RECOMMENDED	
	NOTES: 1 2 3 4 5 6 7 8 9 10			PUBLICATION	

NEXT:

UNCLASSIFIED

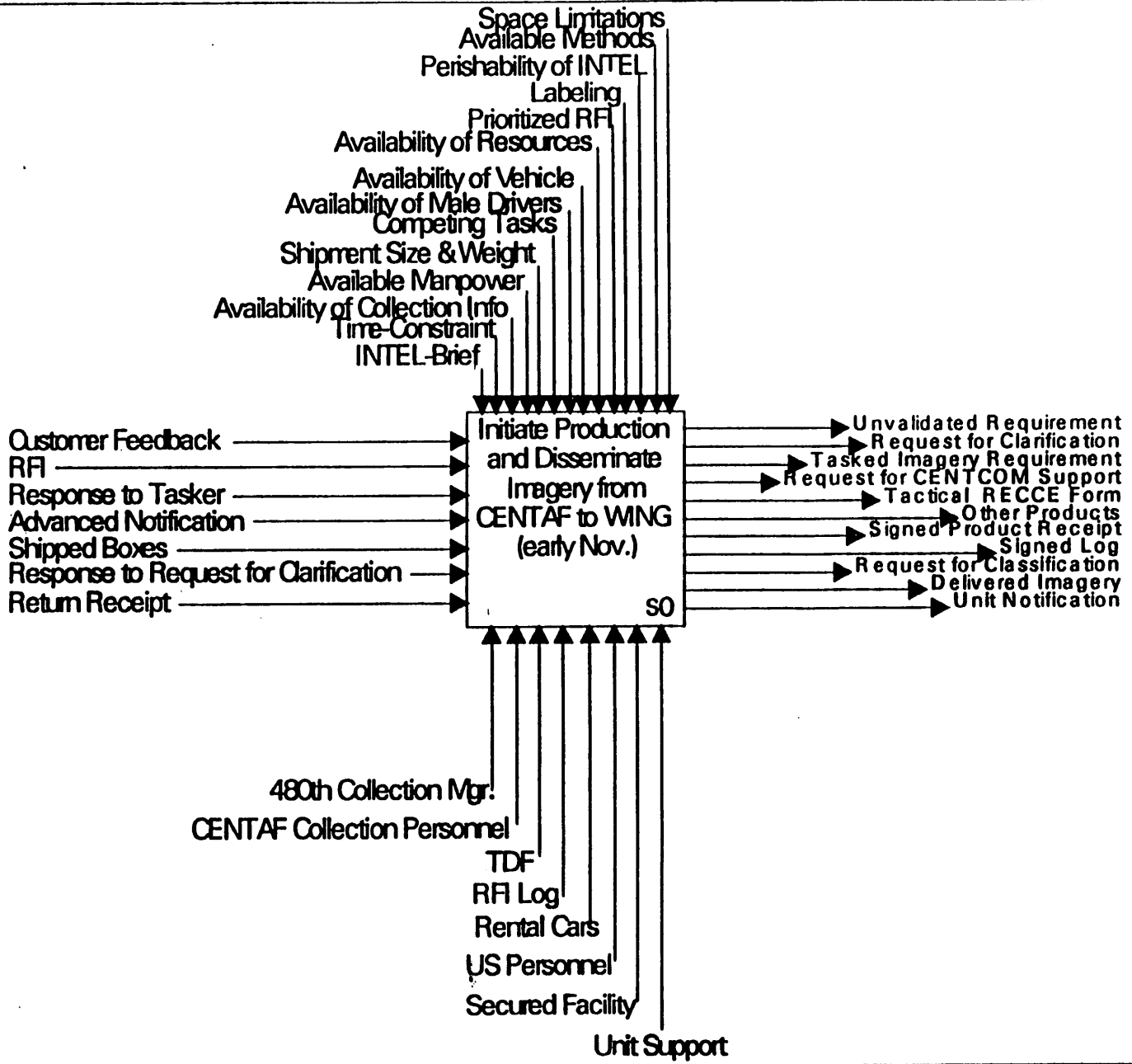

UNCLASSIFIED

NODE:	TITLE: Initiate Production and Disseminate Imagery From CENTAF to WING (early - November) (U)	VIEWPOINT: CENTAF

ELECTRO FILE NAME. 130216S1.IDD	AUTHOR: IPSG Working Group PROJECT: IPSG NOTES: 1 2 3 4 5 6 7 8 9 10	NEW DATE: ~~3/92~~ REV DATE: ~~4/4~~/92 REV NO: #5 10am	X	WORKING / DRAFT RECOMMENDED PUBLICATION

UNCLASSIFIED

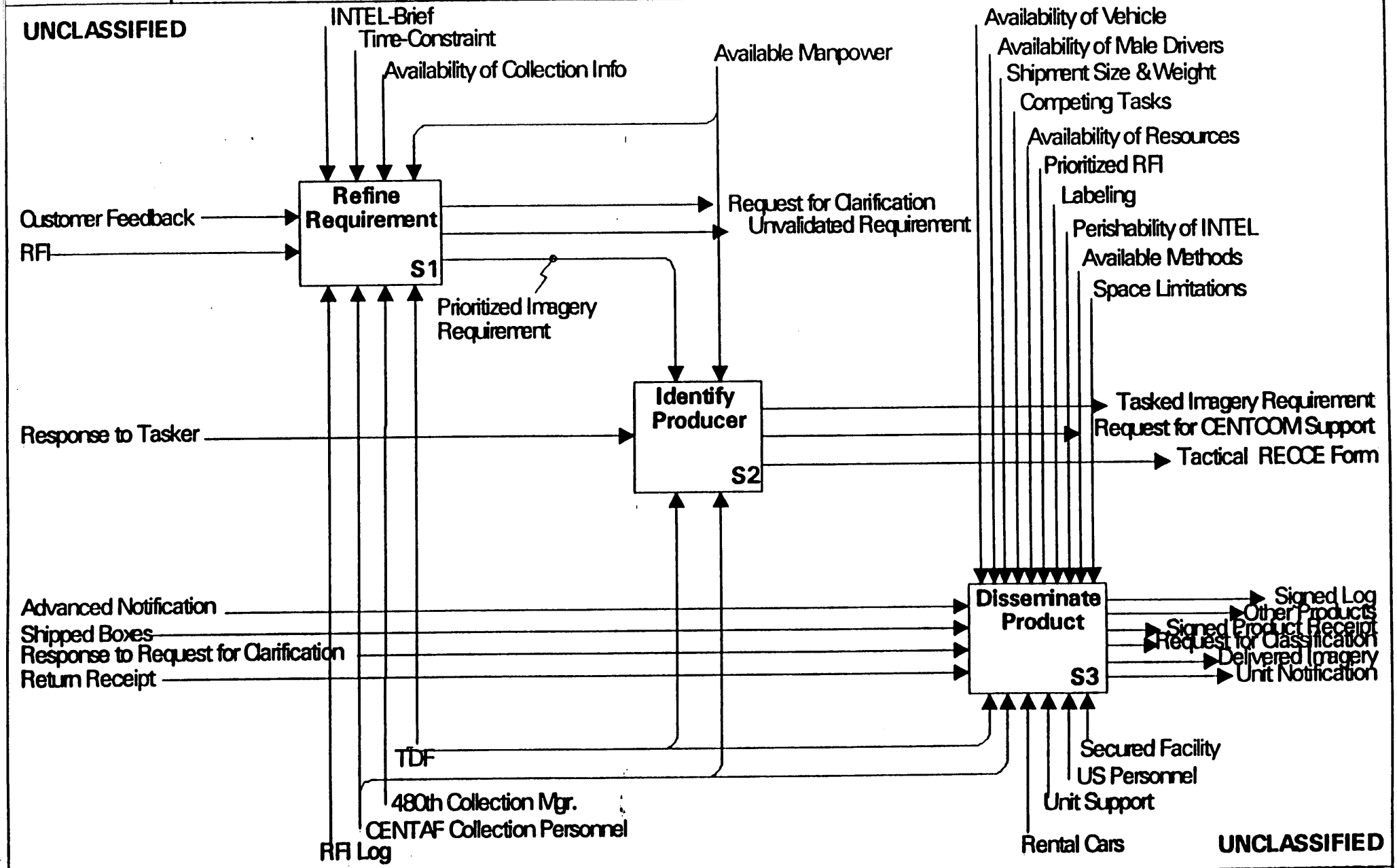

UNCLASSIFIED

NODE:	TITLE:	VIEWPOINT:
SO	Initiate Production and Disseminate Imagery From CENTAF to WING (early - November) (U)	CENTAF

ELECTRO FILE NAME: 130216S1.IDD	AUTHOR: IPSG Working Group PROJECT: IPSG NOTES: 1 2 3 4 5 6 7 8 9 10	NEW DATE: 23/92 REV DATE: 4/14/92 REV NO: #5 10am	X WORKING DRAFT RECOMMENDED PUBLICATION	READER DATE 	NEXT:

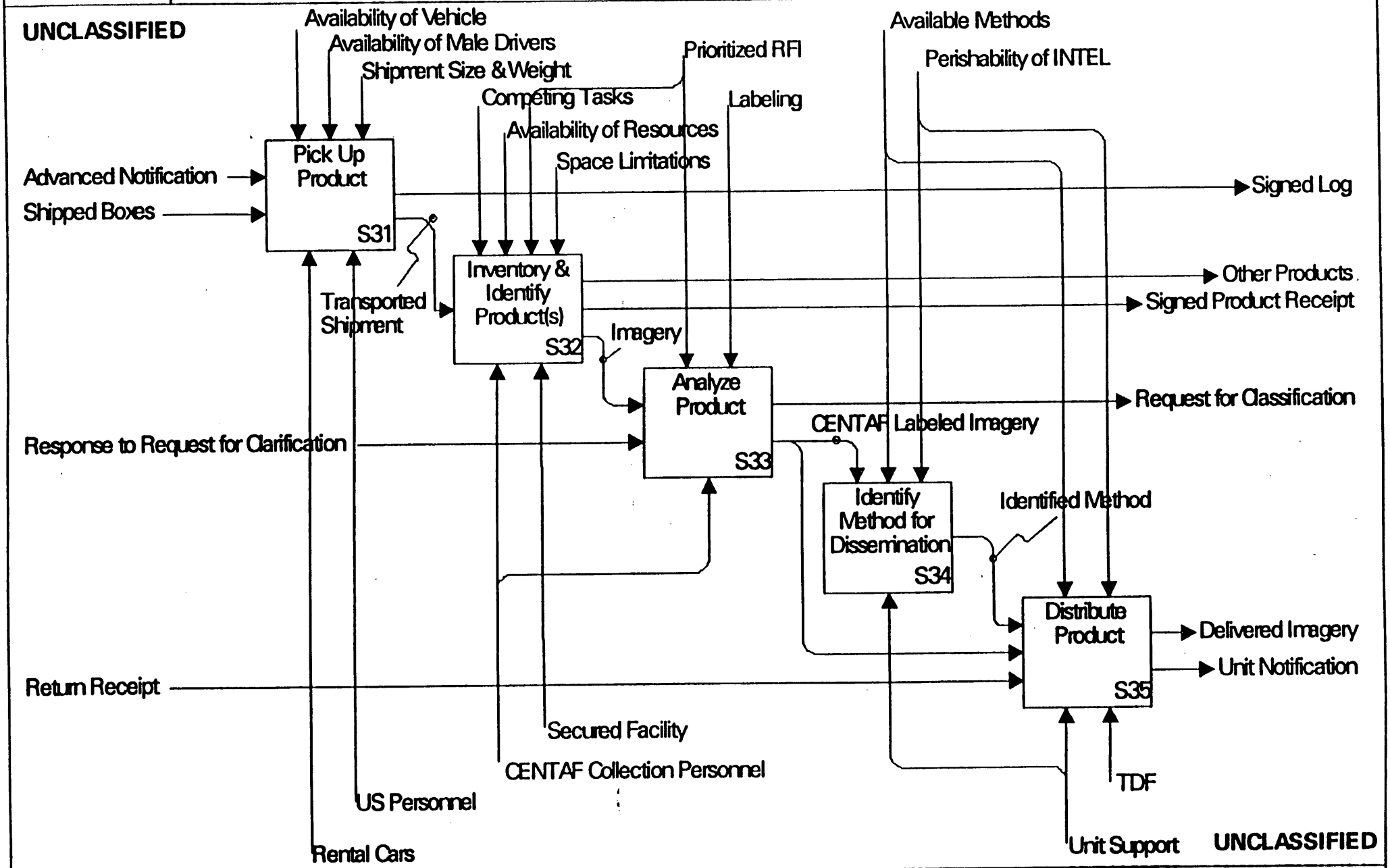

NODE:	TITLE: Initiate Production and Disseminate Imagery From CENTAF to WING (early - November) (U)	VIEWPOINT: CENTAF

CENTAF
Initiate Production & Disseminate Imagery from CENTAF to WING (Nov.) (U) Final Dictionary Report

Reference Report for: 130216S1.IDD

(U)480th Collection Manager
Record Type: Mechanism
Record Name: 480th Collection Manager
Definition = A person(s) from Langley AFB,VA who was a collection manager at the 480th. (Note: Because CENTAF lacked experienced collection managers, the 480th aided CENTAF and collection management duties. The 480th initially prepared 1684 forms to first collect the information and passed it on to DIA for us. After it was collected and received back to the 480th, they were then able to produce the information requested.)
Creation Date = 3/12/92

(U)Advanced Notification
Record Type: Input
Record Name: Advanced Notification
Definition = Prior knowledge of the arrival time and location of a shipment.

(U)Availability of Collection Information
Record Type: Control
Record Name: Availability of Collection Info
Definition = Determination of what had been collected by any section national and tactical systems. (Note: In early-November, the 480th could tell CENTAF what imagery was available from national systems and what imagery had to be collected.)
Creation Date = 3/11/92

(U)Availability of Vehicle
Record Type: Control
Record Name: Availability of Vehicle
Definition = A vehicle, frequently a rental car rather than a military van or truck, was allocated to a staff section based on the staff sections manning level, mission(s) and to a large degree, the rank structure. (Note: The one or two vehicles initially provided the intelligence section were used to support the senior Intelligence officer; transportation to and from the airfield to pick up and deliver products; transportation to various buildings in RIYADH to coordinate with SAUDI and US/Allied Commands; transportation to billets at ESKAN village, 20 miles from the office area; transport to and from the office complex to support shift work; and pick up and deliver shift change meals)
Creation Date = 3/12/92

(U)Availability of Male Drivers
Record Type: Contrcl
Record Name: Availability of Male Drivers
Definition = In accordance with Saudi customs, women were unable to drive. If male drivers assigned to CENTAF were unavailable this constrained CENTAF's ability to pick up shipments.

(U)Available Manpower
Record Type: Control
Record Name: Available Manpower
Definition = Determination of production facility sometimes based on whether they had the staff to produce the product. Sometimes the best producer would not be chosen because they had too many competing requests to work on and another producer would be tasked.
Creation Date = 3/12/92

(U)Available Methods
Record Type: Control
Record Name: Available Methods
Definition = Determine what was on hand to distribute imagery (e.g. rental cars, military trucks, C-21, etc).
Creation Date = 3/11/92

(U)CENTAF Collection Personnel
Record Type: Mechanism
Record Name: CENTAF Collection Personnel
Definition = Personnel assigned to CENTAF responsible for collection management activities. (Note: The CENTAF collection management shop had one SIGINT officer [Captain] and one NCO assigned when CENTAF deployed. Two officers [Captains] were then added to the shop [non-experienced collection managers] to act as Chiefs of Collection Management for Desert Shield. From August to the end of the war the CENTAF collection management shop grew from two to thirty people with the Request for Information (RFI) shop split into a production division with twelve people doing RFI's and ten imagery interpreters. Also included were seven HUMINT officers.
Creation Date = 3/11/92

(U)CENTAF Labeled Imagery
Record Type: Output/Control
Record Name: CENTAF Labeled Imagery
Definition = Imagery with attached form that indicated the destination of the imagery, the RFI number, and who requested it.
Creation Date = 3/11/92

(U)Competing Tasks
Record Type: Control
Record Name: Competing Tasks
Definition = Jobs competing for available resources. (Note: CENTAF RFI staff had to indentify and inventory imagery while receiving new requests; answering the phones from various agencies, producers, and units; trying to distribute imagery that was internal; faxing new requests out to the 480th or contacting NMIST to ask for imagery through CENTCOM).
Creation Date = 3/11/92

(U)Customer Feedback
Record Type: Input
Record Name: Customer Feedback
Definition = Communication from the customer as to the result of some action or inaction; such as the receipt or non receipt of a product.
Creation Date = 3/12/92

(U)Delivered Imagery
Record Type: Output
Record Name: Delivered Imagery
Definition = Product hand carried to internal CENTAF divisions or delivered by means determined by the Unit Support Branch.
Creation Date = 3/11/92

(U)Disseminate Product
Record Type: Activity
Record Name: 3/3
Definition = Product disseminated in early-November by Tactical Digital Fascimile (TDF), or passed to the Unit Support Branch (USB) to find a courier, aircraft, or waited for unit to come to RIYHAD . (Note: USB would call the receiving unit to tell them how a product would be delivered. USB would package the material and put it on a transport vehicle or aircraft, etc.).
Creation Date = 3/11/92

(U)Distribute Product
Record Type: Activity
Record Name: 3/5
Definition = Products were sent to the consumer based on a distribution list and the selected dissemination method.
Creation Date = 3/12/92

(U)Identify Method for Dissemination
Record Type: Activity
Record Name: 3/4
Definition = Three methods were used: first, Tactical Digital Fascimile (TDF); second, the Unit Support Branch determined dissemination (ship aircraft, vehicle), and third, required the receiving unit to pick up material at CENTAF.
Creation Date = 3/11/92

(U)Identify Producer
Record Type: Activity
Record Name: 3/2
Definition = Determine what agency could satisfy the request for information and to determine if if the producing agency had the resources on hand to produce the product. (i.e., was it ever collected).
Creation Date = 3/11/92

(U)Imagery
Record Type: Output/Input
Record Name: Imagery
Definition = Photographic data collected by national or tactical reconnaissance systems.
Creation Date = 3/12/92

(U)Intelligence-Brief
Record Type: Control
Record Name: Intelligence Brief
Definition = A briefing given twice a day by the Order of Battle Analysts during shift changes to keep personnel informed of current situation.
Creation Date = 3/11/92

(U)Labeling
Record Type: Control
Record Name: Labeling
Definition = Markings that indicated what requirement generated the imagery, or who the imagery needed to be sent to. (Note: Lack of such labels caused the CENTAF RFI Dissemination Management to do an extensive manual search through the RFI logs, and in the absence of a log entry, physically examine the imagery to determine who to send it to.)
Creation Date = 3/12/92

(U)Other Products
Record Type: Output
Record Name: Other Products
Definition = Products that were sent to CENTAF but were not specifically the imagery products produced as a result of the logged RFI's.
Creation Date = 3/12/92

(U)Perishability of Intelligence
Record Type: Control
Record Name: Perishability of Intelligence
Definition = The period of time during which an intelligence product is useful.
Creation Date = 3/12/92

(U)Pick Up Product
Record Type: Activity
Record Name: 3/1
Definition = The process of retrieving boxed products from transportation personnel who controlled the storage of incoming material, equipment, etc.
Creation Date = 3/12/92

(U)Prioritized Imagery Requirement
Record Type: Output/Input
Record Name: Prioritized Imagery Requirement
Definition = All RFI's were prioritized by Collection Manager (CM)/Production Personnel. Prioritization was based on the current intelligence briefings, on asking the analysts, or at the direction from CENTAF Information. (Note: Prioritization was best guessed as Intelligence personnel were not allowed in a "special planning cell". Most requestors pushed their requirements as priority 1.)
Creation Date = 3/11/92

(U)Prioritized RFI
Record Type: Control
Record Name: Prioritized RFI
Definition = Assigned ranking to a request. (Note: Based on the current threat intelligence breifings, and CENTAF/information. Most number 1 priorities were assigned depending on seniority of the requestor regardless of need.
Creation Date = 3/12/92

(U)Refine Requirement
Record Type: Activity
Record Name: 3/1
Definition = Finding out what the requestor really wanted through clarification of request with further explanation.
Creation Date = 3/12/92

(U)Rental Cars
Record Type: Mechanism
Record Name: Rental Cars
Definition = CENTAF/IN was allocated rental cars by the Transportation Officer. (Note: Their availability for dissemination was based on other existing priorities.)
Creation Date = 3/12/92

(U)Request for CENTCOM Support
Record Type: Output
Record Name: Request for CENTCOM Support
Definition = A request for help from CENTAF's higher headquarters - either for guidance on how to do the task or help to produce product.
Creation Date = 3/12/92

(U)Request for Clarification
Record Type: Output
Record Name: Request for Clarification
Definition = Finding out what the requestor specifically required by asking for further explanation.
Creation Date = 4/14/92

(U)Response to Tasker
Record Type: Input
Record Name: Response to Tasker
Definition = Refers to the producers informing CENTAF dissemination that the tasking was complete, underway, rejected, or tasked out to some other agency.
Creation Date = 3/12/92

(U)Response to Request for Clarification
Record Type: Input
Record Name: Response to Request for Clarification
Definition = The requestor providing CENTAF with more information about a RFI.
Creation Date = 4/14/92

(U)Return Receipt
Record Type: Input
Record Name: Return Receipt
Definition = Form signed by CENTAF which ensured that the product was received and noted the day it was received. (Note: Receipt was returned to producer [usually a Air Force Form 310 or another agency form]; receipt also showed all items that were missing if any.)
Creation Date = 3/12/92

(U)RFI

Record Type: Input

Record Name: RFI

Definition = Request for Information - A CENTAF form developed to request information from a consumer to a producer. (Note: A CENTAF form developed from trial and error. Starting point was an old CENTAF form used in our Collection Management Shop and CENTCOMs RFI forms. The form was also based on the NMIST form; reason for this was to expedite requests to produce without re-writing request for each producer (although an additional sheet/form required by producer was sometimes attached to an RFI when submitted. RFIs came from internal [CENTAF targeteers, analyst, VIPs] wings, units, and coalition forces.)

Creation Date = 3/12/92

(U)RFI Log

Record Type: Mechanism

Record Name: RFI Log

Definition = A manual system developed to record and track RFIs. (Note: The entire log system consisted of one binder with a line to record the number assigned to a RFI, who requested it, title of material [e.g. airfield and SCUD search etc.] , date and time request it was received and date and time the requestor needed the information. The RFI's were put into five binders [for open request] which contained the original RFI request. A status sheet was attached to each RFI and five binders were used to contain of closed requests.)

Creation Date = 3/12/92

(U)Secured Facility

Record Type: Mechanism

Record Name: Secured Facility

Definition = An installation (building, floor, office, tent, vehicle) protected by either electronic and physical means to safeguard classified data.

Creation Date = 3/12/92

(U)Shipment Size and Weight
Record Type: Control
Record Name: Shipment Size and Weight
Definition: The dimensions and volume (product attributes) of a shipment that may constrain CENTAF's ability to pick up a product.

(U)Signed Log
Record Type: Output
Record Name: Signed Log
Definition = Log signed by Intelligence personnel when picking up product's. (Note: Log belonged to transportation personnel at the air base.)
Creation Date = 3/12/92

(U)Signed Product Receipt
Record Type: Output
Record Name: Signed Product Receipt
Definition = An Air Force Form 310 which is an officially recognized document for receipt of classified data. (Note: Unit Support Branch used to verify delivery from CENTAF to subordinate elements and vice versa.)
Creation Date = 3/12/92

(U)Space Limitations
Record Type: Control
Record Name: Space Limitations
Definition = Constraint on work area availability. (Note: Only a small work area was available. Space was "borrowed" from another branch.)
Creation Date = 3/12/92

(U)Tactical RECCE Form
Record Type: Output
Record Name: Tactical RECCE Form
Definition = An AF form filled out to request RF-4 imagery. (Note: Form was given to Intelligence officers/NCO manning the RECCE desk in the TACC. The form included coordinates, justification, requestors name, phone number, number of hardcopy images needed .)
Creation Date = 3/12/92

(U)Tasked Imagery Requirement
Record Type: Output
Record Name: Tasked Imagery Requirement
Definition = RFI dealing with imagery. (Note: RFI was faxed to producer [if 480th] or producer was called on the phone with a back up copy to come later.)
Creation Date = 3/12/92

(U)TDF
Record Type: Mechanism
Record Name: TDF
Definition = Tactical Digital Facsimile (TDF) , (1970's technology that was fielded during Desert Shield). (Note: Used to a. forward RFI's to 480th or later to other producers; b. used by Air Force units to forward their request to CENTAF to fill requirements; c. used to pass imagery to units when time was a limiting factor; and d. used to pass any information units needed.
Creation Date = 3/12/92

(U)Time-Constraint
Record Type: Control
Record Name: Time Constraint
Definition = Time limitations on an activity. (Note: It required time consuming effort to grasp the overall meaning of the customer needs and then to restate those needs into a meaningful statement of need.)
Creation Date = 3/12/92

(U)Transported Shipment
Record Type: Output/Input
Record Name: Transported Shipment
Definition = Products moved from one location to another. (Note: A shipment is considered transported when it has been moved [in more than one trip if necessary] from the arrival airfield to the dissemination section in the intelligence area where the shipment would be opened and identified.)
Creation Date = 3/12/92

(U)Unit Notification
Record Type: Output
Record Name: Unit Notification
Definition = Informing a receiving unit that products have arrived and are ready for delivery. (Note: Either inform them to pick them up or notify the means of transportation the product is being shipped.)
Creation Date = 3/12/92

(U)Unit Support Branch
Record Type: Mechanism
Record Name: Unit Support Branch
Definition = A branch of CENTAF whose main function was to provide intelligence support to units.
Creation Date = 3/12/92

(U)Unvalidated Requirement
Record Type: Output
Record Name: Unvalidated Requirement
Definition = A disapproved request for either a product or production.
Creation Date = 3/12/92

(U)US Personnel
Record Type: Mechanism
Record Name: Unit Personnel
Definition = A United States citizen required for the receipt of shipped products.
Creation Date = 3/12/92

18th Airborne Scenario
Disseminate Annotated & Template
Imagery from 18th Airborne to 24th Infantry Div. (Feb.) (U)
"Z" Diagrams

(U) The scenario presented by XVIII Airborne Corps occured during the middle of February. The bombing phase of Operation Desert Storm was still ongoing and XVIII Airborne Corps had already completed its deployment from Dhahran to Rafha.

(U) The Airport Terminal at Rafha housed the Headquarters and Staff for the XVIII Airborne Corps. The CTOCSE was located inside the airport fire station providing convenient and immediate access to the runway and parking apron. Our compound included an enclosed protected area for tactical C^3I systems, antennas, satellite communications, plus parking for tactical support equipment for JSTARS and SLAR down-links, TENCAP systems and Engineer terrain vans. We enjoyed excellent connectivity to higher and lower Headquarters via C^3I systems, Couriers and Liaison Teams.

(U) Volume of information in hard-copy form (boxes) is difficult to estimate. Our Collection, Management, and Dissemination Section (CM&D) grew from a base number of 16 soldiers to a final number of about seventy soldiers. Involved in their mission was the receipt of film for imagery exploitation. Eight CM&D members were photo interpreters. Because we flew two light tables from Ft. Bragg to Saudi Arabia we increased our requirement to exploit imagery. Therefore, daily or weekly volume of hard-copy (boxes) of intelligence is difficult to estimate since rolls of film, overlays, books, hard-copy photos, computer disks, various products from ARCENT, DIA and ITAC were constantly arriving. It was constant motion receiving, breaking down packages, determining contents and push requirements, repackaging, and distribution.

(U) Electronic message receipt varied. Generally, we received between 1000 and 1500 messages per day. Several occasions the discussion centered on the number 3,000 as a daily message count number. However, that was the exception not the rule. It should be noted that SIGINT type messages generally are not lengthy and depending on the event, (i.e., scud launches) would often be duplicated by single and multple intelligence agencies. However, each did require someone to read the message and determine if a requirement existed.

ELECTRO. FILE NAME: 130216Z0.IDD	AUTHOR: IPSG Working Group PROJECT: IPSG NOTES: 1 2 3 4 5 6 7 8 9 10	NEW DATE: 4/92 REV DATE: 04/15/92 REV NO: #3	X	WORKING	READER DATE	JTEXT:
				DRAFT		
				RECOMMENDED		
				PUBLICATION		

UNCLASSIFIED

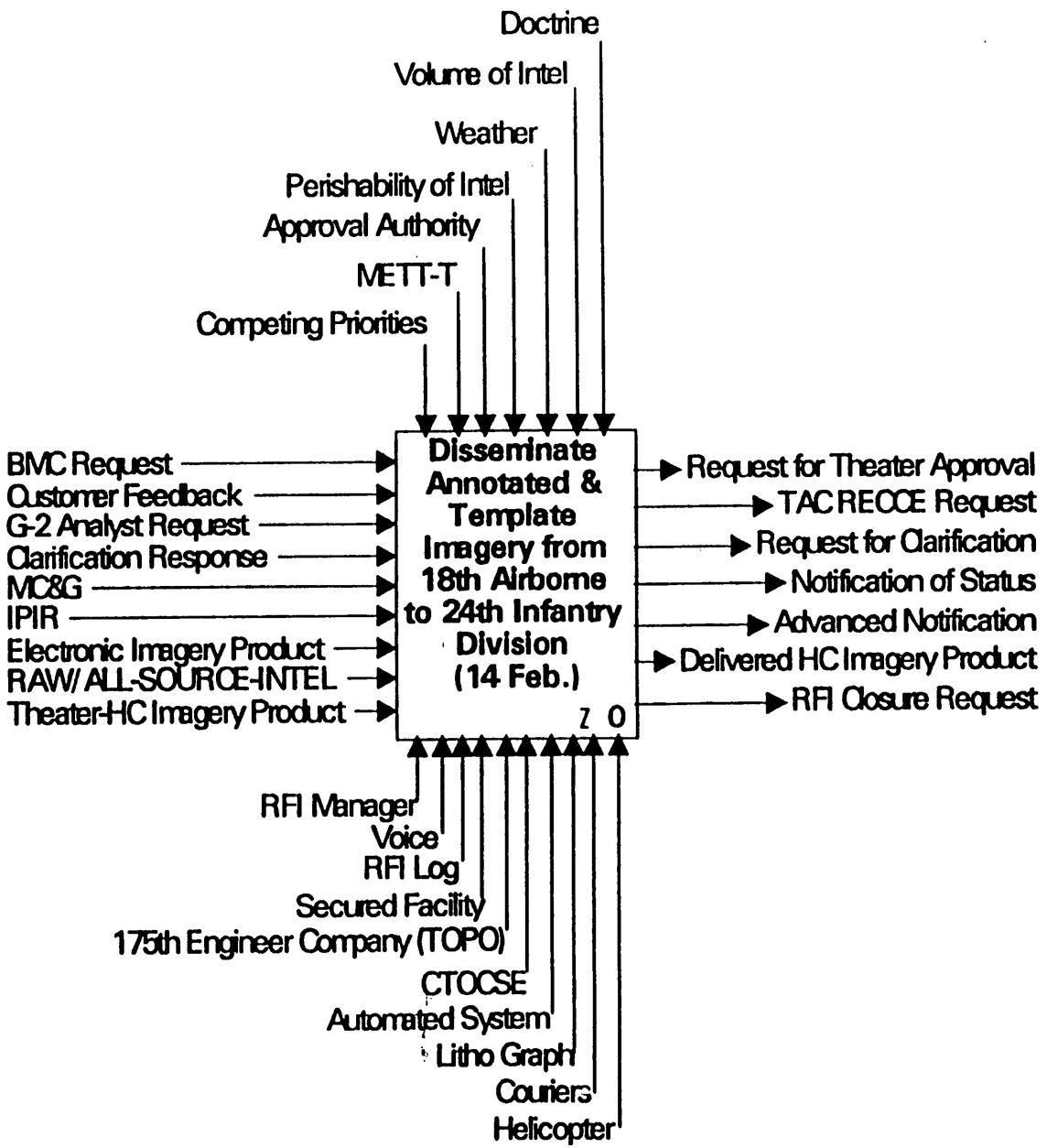

UNCLASSIFIED

NODE: Z	TITLE: Disseminate Annotated & Template Imar from 18th Airborne to 24th Infantry Division (February) (U)	VIEWPOINT: 18th Airborne

ELECTRO FILE NAME: 130216Z0.IDD	AUTHOR: IPSG Working Group PROJECT: IPSG NOTES: 1 2 3 4 5 6 7 8 9 10	NEW DATE 24/92 REV DATE: 04/15/92 REV NO: #3	X	WORKING	READER DATE	VTEXT:
				DRAFT		
				RECOMMENDED		
				PUBLICATION		

UNCLASSIFIED

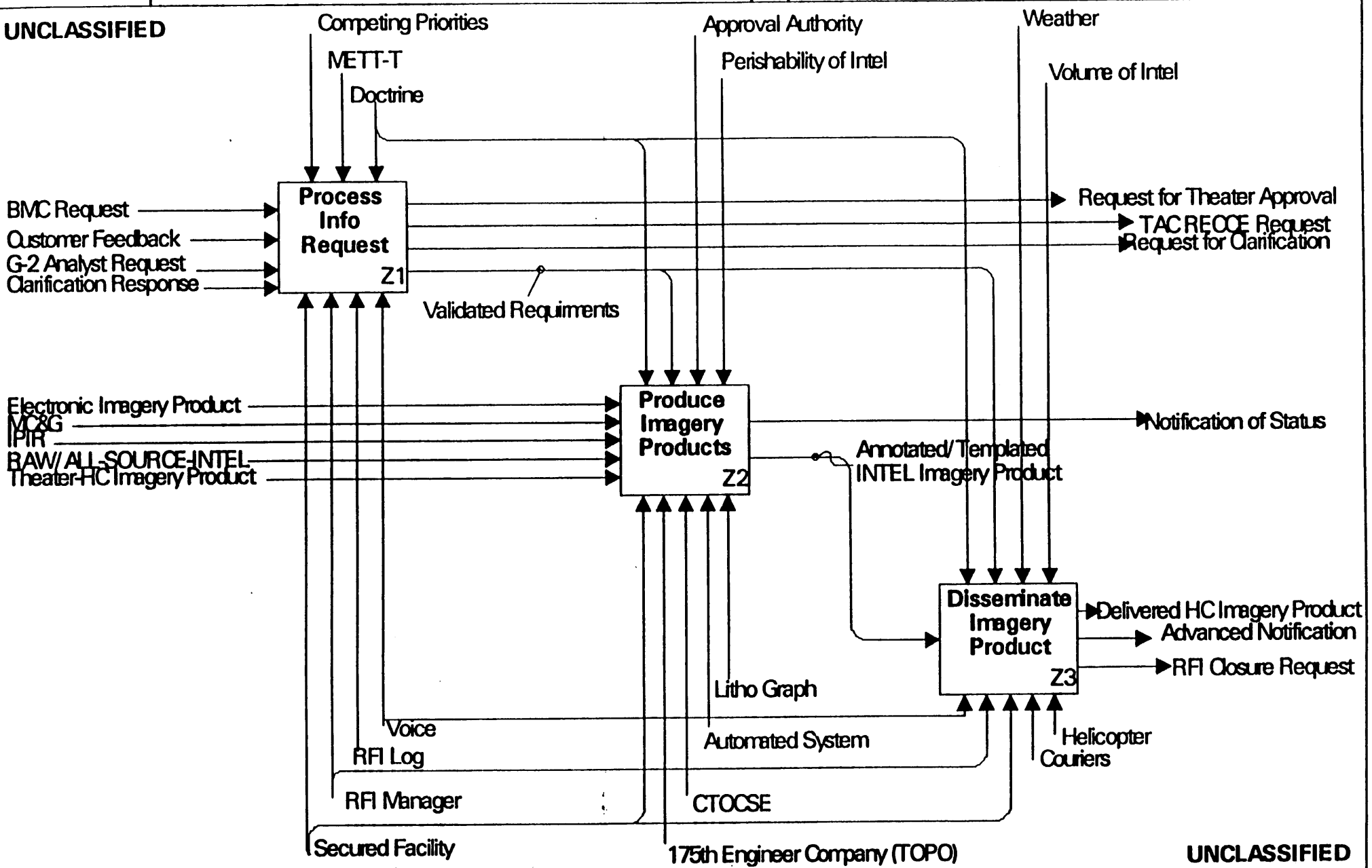

UNCLASSIFIED

NODE: Z-0	TITLE: Disseminate Annotated & Template Imagery from 18th Airborne to 24th Infantry Division (February) (U)	VIEWPOINT: 18th Airborne

18TH Airborne
Disseminate Annotated & Template
Imagery from 18th Airborne to 24th Infantry Division (Feb.) (U)
Final Dictionary Report

Reference Report for: 130216Z0.IDD

(U)175th Engineer Company (TOPO)
Record Type: Mechanism
Record Name: 175th Engineer Company (TOPO)
Definition = -Topographic Engineer Company in direct support to 18th ABC G-2. - Provides terrain analysis support, limited imagery interpretation, production of terrain & imagery products. Sun work stations were procured to produce paper imagery products of digitized imagery from National and theater resources.
Creation Date = 3/19/92

(U)Advanced Notification
Record Type: Output
Record Name: Advanced Notification
Definition = Notification that an Imagery Product would arrive within a certain time frame. Normally accomplished via voice communications (telephone, radio)
Creation Date = 3/19/92

(U)Annotated/Templated INTEL Imagery Product
Record Type: Output/Input
Record Name: Annotated Templated INTEL Image. Prod.
Definition = - Product developed by 175th Eng. Co. (TOPO). - Produced at 175th from Acetate overlays of current/projected enemy disposition and overlaid on MC&G products used throughout 18 ABC. - Imagery normally digitized at Ft. Bragg transmitted to Saudi and exploited on the Sun computer. - Delivered to subordinates by helicopter.
Creation Date = 3/19/92

(U)Approval Authority
Record Type: Control
Record Name: Approval Authority
Definition = 1684 form. Necessary to gain validation by theater CINC for satellite imagery by Corps commander.
Creation Date = 3/19/92

(U)Automated System
Record Type: Mechanism
Record Name: Automated System
Definition = The system used to downlink imagery to Ft. Bragg, exploit it, digitize it, then transmitt the digitized product to Saudi by Satellite. The system to receive in Saudi was a MIDS Van and TR-1 circuit processing the digitized imagery back to disk and courier delivery to Rafha.
Creation Date = 3/19/92

(U)BMC Request
Record Type: Input
Record Name: BMC Request
Definition = A request for imagery from the Battle Management Center.
Creation Date = 3/19/92

(U)CTOCSE
Record Type: Mechanism
Record Name: CTOCSE
Definition = Corps Tactical Operations Support Element. Consists of: - IPS: Intelligence Production Section - CM&D: Collection, Management & Dissemination Section. -CI-A: Counter Intelligence Analysis Section. - TCAE: Technical Control Analysis Element. - Provides Intelligence Support to 18 ABC staff and combat divisions. - Responsible for producing all source Intelligence and targeting products.
Creation Date = 3/19/92

(U)Clarification Response
Record Type: Input
Record Name: Clarification Response
Definition = The determination of specific requirements of an RFI between the RFI manager and the consumer.
Creation Date = 3/19/92

(U)Competing Priorities
Record Type: Control
Record Name: Competing Priorities
Definition = - Identification of Corps mission priority with division mission priorities.
Creation Date = 3/19/92

(U)Couriers
Record Type: Mechanism
Record Name: Couriers
Definition = Soldiers from Co. B/319 M1 Bn who hand carried products to 18 ABC consumers. Normally they flew by helicopter to receipt for products at KKMC and later travelled by helicopter in delivering 18 ABC products to 18 ABC subordinates.
Creation Date = 3/19/92

(U)Customer Feedback
Record Type: Input
Record Name: Customer Feedback
Definition = Used by RFI manager to determine if the RFI was satisfactorily met. If RFI was satisfied it was then closed out. If RFI was not satisfied the customer and RFI manager would restart the process to satisfy consumer requirement.
Creation Date = 3/19/92

(U)Delivered HC Imagery Product
Record Type: Output
Record Name: Delivered HC Imagery Product
Definition = Finished hard copy imagery product delivered at the Division level. Normally accompanied by a product shipping document that listed contents of the containers and the RFIs they responded to.
Creation Date = 3/19/92

(U)Disseminate Imagery Product
Record Type: Activity
Record Name: 4/Z3
Definition = - Delivery of annotated/ templated imagery.
Creation Date = 3/19/92

(U)Electronic Imagery Product
Record Type: Input
Record Name: Electronic Imagery Product
Definition = Digitized imagery coming from Ft Bragg to CTOCSE 18 ABC in Saudi.
Creation Date = 3/19/92

(U)G-2 Analyst Request
Record Type: Input
Record Name: G-2 Analyst Request
Definition = - A request from an Intelligence Analyst in the CTOCSE RFI through the RFI Manager to an outside agency.
Creation Date = 3/19/92

(U)Helicopter
Record Type: Mechanism
Record Name: Helicopter
Definition = A primary vehicle used for dissemination in 18 ABC. Solved the delivery of products from receipt at KKMC to subordinate divisions over distances of hundreds of kilometers.
Creation Date = 3/19/92

(U)IPIR

Record Type: Input

Record Name: IPIR

Definition = Imagery Photograph Interpretation Reports (IPIRs). Formatted electronic messages which contain intelligence exploited from images.

Creation Date = 3/19/92

(U)Litho Graph

Record Type: Mechanism

Record Name: Litho Graph

Definition = Reproduction machine used by the 175th Engineering Company (TOPO) to merge acetate overlays and imagery into a single product for mass production.

Creation Date = 3/19/92

(U)MC&G

Record Type: Input

Record Name: MC & G

Definition = Defense Mapping Agency acronym for maps, charts, and geodisy products. These products were used to establish baseline for 175th TOPO imagery products with annotated overlays.

Creation Date = 3/19/92

(U)METT-T

Record Type: Control

Record Name: METT-T

Definition = Mission, Enemy, Tactics, Terrain and Time. Used to establish operational concepts to develop warplan. Assigns combat resources in relationship to type of mission, enemy disposition and capabilities, terrain and probable enemy tactics timelines.

Creation Date = 3/19/92

(U)Notification of Status
Record Type: Output
Record Name: Notification of Status
Definition = Voice communication by RFI manager to an RFI requestor to identify delivery of a product to a unit. Usually done prior to helicopter delivery to subordinate division G-2s.
Creation Date = 3/19/92

(U)Perishability of Intel
Record Type: Control
Record Name: Perishability of INTEL
Definition = Intel by its nature is time dependent. The older the intel the greater the loss in its value.
Creation Date = 3/19/92

(U)Process Info Request
Record Type: Activity
Record Name: 4/Z1
Definition = Logging of the RFI (Assignment of Corps #); tracking of the RFI from receipt to customer satisfaction; validation of RFI from Corps & Div Staffs & Intel Analysts; RFI management by SIGINT, IMINT, HUMINT; manager dentification of priority w/in 18 ABC.
Creation Date = 3/19/92

(U)Produce Imagery Products
Record Type: Activity
Record Name: 4/Z2
Definition = - Hard copy message (electronic) providing exploitation results of imagery. - Hard copy photograph. - Annotated imagery identifying units, equipment, coordinates. Templated imagery depicting IRAQ unit disposition and projecting what is missing but should be there - Paper product with grid lines and operational graphics overlaid on the imagery with annotations/templates.
Creation Date = 3/19/92

(U)RAW/ALL-SOURCE-INTEL
Record Type: Input
Record Name: RAW, ALL SOURCE INTEL
Definition = Raw INTEL- SLAR, Combat information etc. All Source = Product produced by CTOCSE using multiple intelligence sources to confirm/ deny enemy dispositions. Used during the intelligence process to produce a product on an overlay. Product was provided to the 175th Eng. Co. (TOPO) to produce annotated/templated imagery products.
Creation Date = 3/19/92

(U)Request for Clarification
Record Type: Output
Record Name: Request for Clarification
Definition = Discussion between 18 ABC RFI manager and RFI requestor to determine actual requirements of RFI.
Creation Date = 3/19/92

(U)Request for Theater Approval
Record Type: Output
Record Name: Request for Theater Approval
Definition = Request sent to CENTCOM for validation and forwarding to DIA for further validation and tasking of national collection assets. Imagery requests were provided in form 1684 formats.
Creation Date = 3/19/92

(U)RFI Closure Request
Record Type: Output
Record Name: RFI Closure Request
Definition = Telephonic (or radio) query of division by the RFI manager which established whether the division was satisfied with the product it received in response to the RFI. If the division was satisfied the RFI was closed out in the RFI log. If not, a new requirement would be developed.
Creation Date = 3/19/92

(U)RFI Log
Record Type: Mechanism
Record Name: RFI Log
Definition = Record of the subordinate or staff RFI, identifies the Corps RFI# with the subordinate #, provides a record of the tracking of an RFI from request to completion.
Creation Date = 3/19/92

(U)RFI Manager
Record Type: Mechanism
Record Name: RFI Manager
Definition = An officer who manages incoming requests for information, tracks the RFI through to completion, and coordinates directly with the consumer to determine satisfaction.
Creation Date = 3/19/92

(U)Secured Facility
Record Type: Mechanism
Record Name: Security Facility
Definition = Sensitive Comparted Intelligence Facility. The total grouping of building facility, communication vans, satellite data links and theater collection data links, to support the production of ALL-SOURCE intelligence and targeting materials.
Creation Date = 3/19/92

(U)TAC RECCE Request
Record Type: Output
Record Name: TAC RECCE Request
Definition = Request for support for theater controlled airborne collection. Passed either telephonically or by electronic message to the TACC. Requests included coordinates, justification, requestors name, phone number, number of hard copy images required. Pre-planned requests were validated and forwarded by ARCENT to TACC.
Creation Date = 3/19/92

(U)Theater-HC Imagery Product
Record Type: Input
Record Name: Theater HC Imagery Product
Definition = Hard copy (non-digitized or electronic media) imagery collected by theater controlled airborne imagery collection platforms.
Creation Date = 3/19/92

(U)Validated Requirements
Record Type: Output/Input
Record Name: Validated Requirements
Definition = Approval of an RFI or 1684 by 18 ABC, ARCENT or CENTCOM.
Creation Date = 3/19/92

(U)Voice
Record Type: Mechanism
Record Name: Voice
Definition = Use of telephone or radio communications to request / disseminate intelligence.
Creation Date = 3/19/92

(U)Volume of Intel
Record Type: ICBM
Record Name: Volume of Intel
Definition = The numbers of copies of an intel product (annotated imagery) necessary to satisfy a consumer. (Note - The amount of paper imagery products (templated/annotated) produced by the 175th Eng. Co. (TOPO). The large amounts required couriers and transportation assets to be provided by the 319 MI Brigade and 18 ABC G-3 Corps. - The end of the automation process and beginning of the manual dissemination efforts.)
Creation Date = 3/19/92

(U)Weather

Record Type: Control

Record Name: Weather

Definition = The elements. Note: Weather was a constraint on helicopter delivery of finished products to division.

INTRODUCTION

(U) This brief overview of Operations Desert Shield and Desert Storm is a synthesis of the information provided in Volume I of Conduct of the Persian Gulf War, Final Report to Congress, (Pursuant to Title V of the Persian Gulf Conflict Supplemental Authorization and Personnel Benefit Act of 1991, Public Law 102 - 25), Department of Defense, April 1992. The report is divided into three volumes: Volume I focuses on how the threat in the Persian Gulf developed and how the United States and its Coalition partners responded to that threat at the strategic, operational, and tactical levels; Volumes II and III focus on specific issues and the performance of weapon systems. Despite the volume of data collected and the numerous documents available, the report is an essential baseline document for any future research effort focused on Operations Desert Shield and Desert Storm. It also complements the Operations Desert Shield and Desert Storm data base found in the Joint Uniform Lessons Learned System.

OVERVIEW OF EXECUTION OF OPERATIONS DESERT SHIELD AND DESERT STORM

PHASE I - OPERATION DESERT SHIELD, 7 AUGUST 1990 - 7 NOVEMBER 1990

OPERATIONS DESERT SHIELD AND DESERT STORM AREA OF INTEREST:

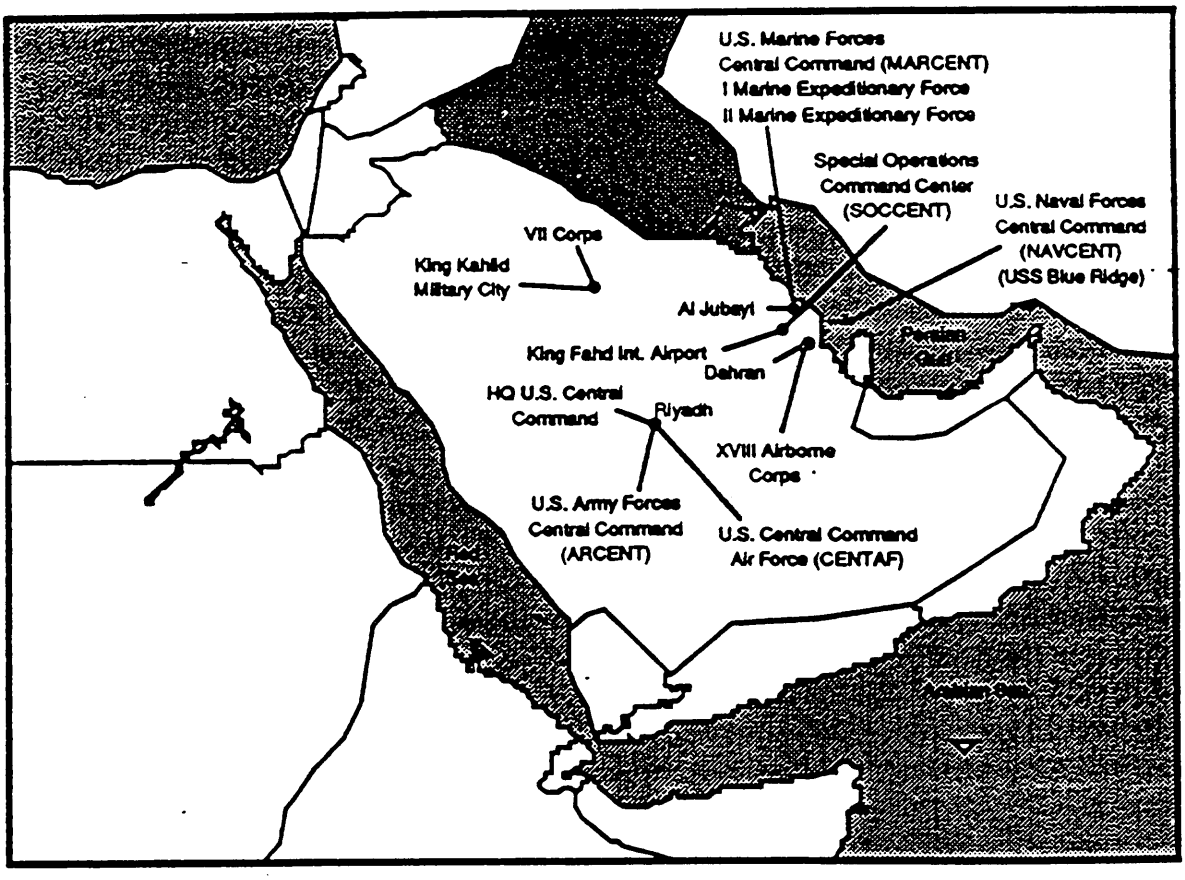

(U) CENTCOM Deployment

(U) Once the decision to deploy US forces was made, the question facing CENTCOM and Saudi planners was the order in which forces should be deployed and how the forces should be used. A credible deterrence required the early presence of substantial numbers of combat units. The intent of deterrence and defense of Saudi Arabia was to confront Iraq with unacceptable costs and the prospects of military conflict with United States. The initial order to deploy combat forces to the Gulf region was issued on 6 August. CENTCOM began deploying the combat forces on 7 August -- marking the beginning of Operation Desert Shield.

(U) A key decision was made early to deploy the greatest amount of ground combat power available. This decision accelerated deployment of combat forces and deferred deployment of theater combat service and service support forces. Naval Maritime Prepositioning Squadrons (MPS) based at Diego Garcia and Guam sailed on 7 August, while USAF aircraft and brigades of the 82nd Airborne Division and the 101st Airborne Division (Air Assault) began deployment. Air Force A-10 squadrons and the Army 3rd Armored Cavalry Regiment (ACR) moved up in the deployment schedule to put more anti-armor units into Saudi Arabia. The decision to deploy combat forces in August and September allowed CENTCOM to rapidly establish a credible defense and deterrent force in theater rapidly during a period when the Iraqi forces probably outnumbered Coalition forces.

(U) ARCENT Deployment

(U) The first units began departing CONUS on 8 August 1990; these included the Army XVIII Airborne Corps assault command post and a lead element of the 82nd Airborne Division's ready brigade. Lead elements of the 24th Infantry Division (Mechanized) also began arriving during this period, as did the first elements of the Patriot missile battery. They were followed the next day by the 101st Airborne Division (Air Assault). During this phase the Army ultimately deployed more than 115,000 soldiers, 700 tanks, 1,000 armored personnel carriers, 145 AH-64 Apache helicopters, and 294 155mm self-propelled howitzers.

(U) MARCENT Deployment

(U) The 7th Marine Expeditionary Brigade (MEB) received deployment orders on 7 August and began departing CONUS on 14 August 1990. Its force structure consisted of a mechanized ground combat element with more than 50 M60A1 tanks, self-propelled artillery, and a supporting aircraft group with attack helicopters and fixed-wing aircraft. The 17,000 Marines of the 7th MEB were ready for combat by 26 August. The I Marine Expeditionary Force command element arrived in theater on 4 September and assumed command of all Marine forces ashore: 1st Marine Division (MARDIV), 3rd Marine Aircraft Wing (MAW); and 1st Force Service Support Group (FSSG).

(U) CENTAF Deployment

(U) At the time of the Iraqi invasion, the USAF had a small detachment in Dhahran to service regularly scheduled airlift mission, (KC-135 air refueling tankers in the United Arab Emirate supporting the IVORY JUSTICE exercise) and USAF pilots and support personnel stationed in Saudi Arabia as F-15C and F-5 instructors. The first USAF combat aircraft from the 1st Tactical Fighter Wing (TFW) supported by five Airborne Warning and Control Systems (AWAC), arrived on 8 August. Thirty-four hours later, 24 F-15C's arrived from the 71th Tactical Fighter Squadron (TFS), and were on combat air patrol alert four hours after arrival.

[redacted]

(U) NAVCENT Deployment

(U) The carrier *USS Independence* battle group near Diego Garcia and the *USS Dwight D. Eisenhower* battle groups were directed to sail to the Gulf Region on 2 August. These two carrier battle groups combined for more than 100 fighter and attack aircraft and more than 10 surface combatant ships.

(U) The total naval forces deployed consisted of:

- 6 Carrier Battle Groups (CVBG)
- 2 Battleships
- 1 Command ship - *USS Blue Ridge*
- Several support ships
- 7 Mine warfare ships
- Maritime patrol aircraft
- Several submarines
- 1 Amphibious task force (31 ships)
- Naval Special Warfare (NSW) Units

(U) Amphibious unit deployments were supported by both Atlantic and Pacific Fleet forces. In the Atlantic, the 4th MEB deployed on 13 amphibious ships and one Roll On/Roll Off ship with 8,340 Marines. The 4th MEB arrived in the North Arabia Sea between 11 and 16 September and immediately began a series of amphibious exercises. The 13th Marine Expeditionary Unit (Special Operations Capable) with five amphibious ships and 2,300 Marines arrived from the Philippines on 7 September and subsequently integrated with the 4th MEB several days later. The force was supplemented by a Battalion Landing Team and three additional amphibious ships for an additional 2,300 Marines.

PHASE II OPERATION DESERT SHIELD: 8 NOVEMBER 1990 - 15 JANUARY 1991

(U) Phase II began with the President's announcement on 8 November that the military presence in the theater would be reinforced by approximately 200,000 personnel. It was decided that elements of the Army's VII Corp in Europe and additional CONUS forces would be developed. These forces included:

ARMY: 1st Infantry Division (Mechanized); and elements of the VII Corp (1st and 3rd Armored division, 2nd ACR, headquarters and associated combat and support elements).

NAVY: Three additional CVBG's, one battle ship. Marines: One Amphibious Group 3 (with the 5th MEB), substantial air and service support elements of the 11 MEF, including MPS-1 and the 2nd MARDIV.

USAF: 410 additional aircraft.

(U) During this phase, a substantial number of Army Reserve and Army National Guard personnel and units began deployment to Saudi Arabia. The USMC forces deployed additional personnel in December and pushed the number of Marines in theater to more than 70,000 ashore. II MEFs were deployed by sea, air, and MPS; the 2nd MARDIV arrived by 8 January 1991.

(U) Iraq's failure to move into Saudi Arabia provided the time required to deploy a substantial countervailing force. The deployment succeeded for many reasons including: decisive leadership; good resource management; availability of aircraft, ships, and crews; forward deployed supplies and forces; cooperation of European allies, and superb Saudi port facilities. By the time Operation Desert Storm started on 17 January 1991, the force structure built up under Operation Desert Shield was formidable:

GROUND FORCES

ARMY

- 500,000+
- 1300 main battle tanks
- 810 armored fighting vehicles
- 300 missile/rocket launcher systems
- 200 travel howitzers/artillery pieces
- 250+ self-propelled artillery pieces

USMC

- 90,000
- 1,300 tank and armored vehicles
- 10,600 Marines (Amphibious ships)

Coalition

- 350,000 (Egypt, Syria, the GCC, Great Britain, France, and Turkey)
- 37,000 from 14 other countries

NAVAL FORCES

- 6 Carrier Battle Groups (CVBG's): Each with their Air Wings and Escorts
  - *USS John F. Kennedy*
  - *USS MIDWAY*
  - *USS Sarotoga*
  - *USS Theodore Roosevelt*
  - *USS America*
  - *USS Ranger*

- COMIDEASTTFOR with Task Group

- 2 Battleships
  - *USS Missouri* with Escorts
  - *USS Wisconsin* Escorts

- 3 Amphibious Ready Groups and Escorts

- Logistic Support forces

- Ashore: NAVCENT Contingent at USCENTCOM
  - P-3/EP-3 Squadrons (Oman/Bahrain)
  - Support Forces (Bahrain/Oman)

- 79 ships (from 17 other countries)

AIR FORCES

- US/Coalition/Army
- 3800 Fixed Wing and Rotary Aircraft (14 nations)
- 21 Tactical Wings
- 2 Tactical Fighter Groups
- 1 Tactical Reconnaissance Wing
- 1 Tactical Reconnaissance Group
- 1 Tactical Air Control Wing
- 1 Tactical Air Support Squadron
- 4 Tactical Airlift Wings

Naval Air Platforms

- 1,000 aircraft of all types aboard the six carriers, amphibious ships, and their escorts.

OPERATION DESERT STORM: MISSION, OBJECTIVES, AND CONCEPT

(U) Operation Desert Storm departed from the "deter and defend" objectives of Operation Desert Shield and focused on forcing Iraq to withdraw from Kuwait. Based on Secretary of Defense guidance, CINCENT determined his mission as shown:

CONDUCT OFFENSIVE OPERATIONS TO:

- Neutralize Iraqi National Command Authority
- Eject Iraqi armed forces from Kuwait
- Destroy the Republican Guard
- As early as possible, destroy Iraq's ballistic missile, NBC capability
- Assist in the restoration of the legitimate government of Kuwait

(U) In accordance with the mission statement, CINCENT promulgated the key theater military objectives for CENTCOM on 17 January 1991 as follows:

- Attack Iraqi political-military leadership
- Gain and maintain air superiority,
- Sever Iraqi supply lines,
- Destroy known nuclear, biological, and chemical (NBC) production, storage, and delivery capabilities,
- Destroy Republic Guard Forces in the KTO
- Liberate Kuwait city.

(U) Based on Secretary of Defense guidance, CINCCENT's mission statement, and CENTCOM objectives, a final concept of operations was developed.

CINCCENT Concept of Operations:

- Conduct a coordinated, multi-national, multi-axis air, naval, and ground attack
- Strategic air campaign focused on enemy centers of gravity
  - Iraqi national command authority
  - NBC capability
  - Republican Guard Forces Command

- Progressively shift air operations to, and conduct ground operations in the Kuwaiti Theater of Operation (KTO) to
  - Isolate KTO-sever Iraqi supply lines
  - Destroy Republican Guard Force
  - Liberate Kuwait City with Arab forces

(U) The concept of operations was implemented in a four phase campaign during the time periods shown below:

Four Phase Campaign

- Phase I - Strategic Air Campaign (16 Jan 91 - 26 Jan 91)
- Phase II - Air Supremacy in KTO (27 Jan 91)
- Phase III - Battle Preparation (28 Jan 91 - 23 Feb 91)
- Phase IV - Offensive Ground Campaign (24 Feb 91 - 28 Feb 91 -- 100 hours)

(U) The relationships between the CINCCENT's theater objectives identified on 17 January and the concept of operations and the four phase campaign is shown below:

Theater Objectives	Phase I Strategic Air Campaign	Phase II Air Supremacy in the KTO	Phase III Ground Battlefield Prep	Phase IV Ground Offensive Campaign
-Leadership/C3	X			
-Air Supremacy	X	X		
-Cut Supply Lines	X	X	X	X
-NBC Capability	X		X	
-Destroy Republican Guards	X		X	X
-Liberate Kuwait City				X

OPERATION DESERT STORM - EXECUTION

(U) Operation Desert Storm was the first regional conflict in which the Joint Force Air Component Commanders (JFACC) concept was established formally, although it was used as early as World War II. The concept was implemented when the CINCENT operations order made the CENTAF commander responsible for planning the air campaign, and coordinating, allocating, and tasking apportioned Coalition air sorties to meet the theater objectives. This authority extended to 2,700 Coalition aircraft, representing 14 separate national or Service components.

Correlation of Forces

(U) CENTCOM had assessed the balance of ground forces using an assumption that the air campaign would succeed in destroying or neutralizing approximately half of the Iraqi forces in the KTO.

	Coalition Forces	Iraqi Forces
Supporting Attack	1.3	1
Main Attack	1.4	1
Egyptian/Syria Attack	1.4	1
MEF	0.75	1

(U) The force correlation at the final objective for the supporting and main attack was 2.7/1 and 2.2/1, respectively. These force ratios were believed to be sufficiently favorable to ensure success.

(U) The Iraqi order of battle in the KTO on the eve of Operation Desert Storm was considered formidable. Iraq was assessed with the following strength:

- 540,000 troops (recent assessments' put this count as low as 183,000)
- 4,200+ tanks
- 2,8000+ armored personnel carriers
- 3,100 artillery pieces fielded in the KTO
- 30 days-stockpiled ammunition in Kuwait and southern Iraq
- 3 days-on-hand ammunition with each unit
- AAA/SAM's (SA-2/SA-3) - extensive air defense capability (Highly mobile and a substantial challenge. Low level tactics were particularly vulnerable.)
- Aircraft - Capable of rapid strikes and air defense operations.
- Navy - Missile-firing fast patrol boats
- Coastal defense surface-to-surface missiles along Kuwaiti coast.
- Mine field - Northern Gulf.

(U) The Iraqi's ground order of battle, as estimated in January 1991, is shown below:

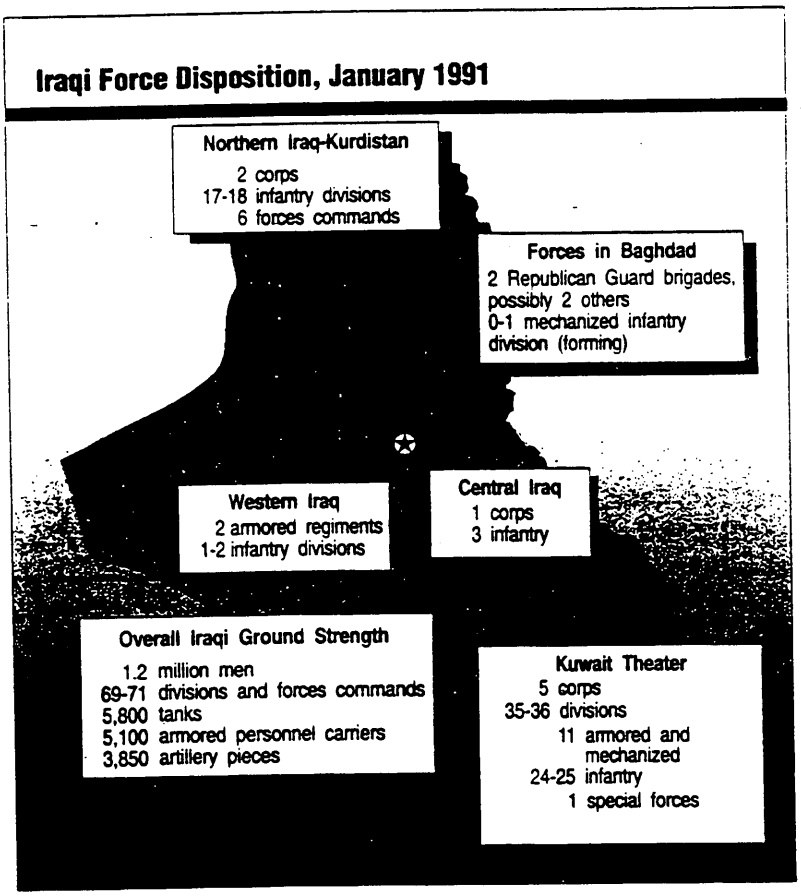

OPERATION DESERT STORM: PHASE I - STRATEGIC AIR CAMPAIGN
16 JANUARY - 26 JANUARY 1991

(U) The success of the Phase 1 Strategic Air Campaign continued throughout Prases II, and III. Air attacks continued throughout the theater against the most crucial targets in each phase. The plan was based on achieving five military objectives developed by the Air Staff's deputy directors of plans for warfighting concept -- a planning group known as CHECKMATE. The air campaign objectives were:

- Isolate and incapacitate the Iraqi regime
- Gain and maintain air supremacy to permit unhindered air operations.
- Destroy NBC warfare capability
- Eliminate Iraq's offensive military capability by destroying major parts of key military production, infrastructure, and power projection capabilities.
- Render the Iraqi army and its mechanized equipment in Kuwait ineffective, causing its collapse.

(U) Producing the daily attack plan involved synthesizing many inputs (e.g., battle damage assessment from previous attacks, CINCCENT guidance, weather, target set priorities, new targets, intelligence, and objectives). Twelve interrelated target sets were developed and assigned based on the most effective use of force. The target sets were:

- Leadership command facilities
- Electricity Production Facilities
- Telecommunication and Command, Control, and Communications Nodes
- Strategic Integrated Air Defense System
- Air Forces and Airfield
- NBC Weapons Research, Production, and Storage Facilities
- Scud Missile, Launchers, and Production and Storage Facilities
- Naval Forces and Port Facilities
- Oil Refining and Distribution Facilities
- Railroads and Bridges
- Iraqi Army Units including Republican Guard Forces in the KTO
- Military Storage and Production Sites

(U) Phase I, the Strategic Air Campaign, succeeded in isolating the Iraqi leadership and degrading Iraq's ability to counter with any effective defensive or offensive force. Air superiority by the Coalition was established on the first day of Operation Desert Storm. Air attacks would continue throughout the war to ensure that the Iraqi Air Force would not be a factor in the outcome.

OPERATION DESERT STORM: PHASE II - AIR SUPREMACY IN THE KTO (27 JANUARY 1991)

(U) Although air superiority was effectively achieved during the first day of the air campaign, air supremacy was not declared until 27 January. Iraq retained some capability throughout the war to react piecemeal to Coalition strikes, but remained incapable of effective interference. The Coalition aircraft had demonstrated they were in undisputed control of Iraqi and KTO airspace.

OPERATION DESERT STORM: PHASE III - BATTLEFIELD PREPARATION (28 JANUARY - 23 FEBRUARY 1991)

(U) Phase III of the campaign continued with day and night air strikes. After more than a month of bombardment, the Iraqi forces remained in Kuwait; but, their capability to wage any kind of a coordinated or effective defense along the border was severely reduced. CENTCOM estimated that battlefield preparation, since the start of Operation Desert Storm, resulted in a 50% reduction in the effectiveness of the Iraqi front line divisions and a 25% reduction in the effectiveness of Iraqi rear forces, notably the Republican Guard Forces.

(U) Preparing and shaping the battlefield for Operation Desert Storm required first, the physical degradation of the Iraq's capabilities, and second, psychological operations (PSYOPS) to deceive and demoralize Iraqi forces. Physical degradation requires extensive use of supporting arms and raids to attack and destroy enemy abilities to conduct operations. PSYOPS attack the enemy's will to fight and forces the enemy to react rather than anticipate the actions of the attacker. The Coalition successfully did both throughout the breadth and depth of the battlefield.

(U) CINCCENT established the priorities for air preparation of the battlefield. Although the ground commanders made recommendations regarding targets and timing of the operations, CINCCENT aligned it with the overall theater plan. The Service components nominated targets, but the CINCCENT apportioned sorties, and the JFACC tasked them.

AIR

(U) Coalition Air Forces flew more than 35,000 sorties against KTO targets, including more than 5,600 against the Republican Guards Forces Command (RGFC). The 3rd MAW, for instance, used AV-8B's and F/8-18s to attack targets inside Kuwait. Priority was given to location and to destroying Iraqi artillery, arms, and troops. By mid-February, the 3rd MAW was used almost totally for battlefield preparation.

GROUND

(U) Destruction of Iraqi artillery was the primary objective in the battlefield preparation. Iraqi artillery was modern by any standard and often out-ranged Coalition guns. While the Coalition could hold Iraqi maneuver forces in position, if left unchecked, Iraqi artillery alone could have disrupted the planned Coalition ground assault. Properly used, Iraqi artillery could have delayed the Coalition breaching operation long enough for a counterattack. Air, attack helicopter, and multiple-launch rocket systems were used to destroy Iraqi artillery. 3rd MAV AV-8B's and F/A-18s, assisted by Marine unmanned aerial vehicles and airborne forward air controller searched out batteries for destruction.

NAVY

(U) The Iraqi Navy and Air Force antiship capabilities posed a threat to Coalition naval forces and to amphibious maneuvers in support of ground operations. The principal Iraqi facilities and naval base from which surface combatants could operate were near Al-Basrah, along the banks of the Shatt Al'-Arab, Iraq's only outlet to the Persian Gulf. Destruction of the Iraqi surface threat was considered a prerequisite for moving the US carrier battle force further north to bring naval air power closer to targets and to prepare for amphibious operations. Eliminating the threat also was essential for US and UK minesweeping operations to clear lanes for amphibious operations and naval gunfire support. High priority targets included land-based silkworm antiship cruise missile batteries (60-mile range), surface-to-air missiles, and aircraft with air-to-surface missile capability.

(U) On 21 January, a more aggressive anti-surface warfare (ASUW) plan to eliminate the Iraqi naval threat was put into effect. The new plan captured the full shift from Operation Desert Shield to Operation Desert Storm. Previously, the focus was on maintaining accurate warfare surveillance in the Persian Gulf, establishing sea control, supporting mine clearing operations, and conducting offensive ASUW operations. The new offensive strategy in support of ASUW objectives were changed to:

- Destroy all Iraqi warfare combatant and minelayers
- Deny Iraqi the use of oil platform for military purposes
- Move back Iraq surface warfare forces in the northern Persian Gulf from south to north
- Prevent attack or threat against Coalition forces and countries in the Gulf

(U) The ASUW offensive strategy was complemented by the Navy's anti-air warfare (AAW) strategy. This strategy was influenced by the Iraqi anti-ship capabilities demonstrated during the Iran-Iraq war when Iraqi aircraft used coordinated long-range antiship missile attacks with in-flight refueling. During Desert Shield, the Iraqis positioned their antiship tanks in several large-scale exercises over Iraq and the northern Persian Gulf. The Iraqi antiair threat included F-1 aircraft with EXOCET missile; B-6D long-range bomber with silkworm missiles; SU-24s capable of carrying AS-7, 9, and 14 air-to-surface missiles, rockets, and laser-guided and general purpose bombs; and the French-built Super Frelon helicopter with an EXOCET missile firing capability.

(U) The strategy's primary mission was to establish and maintain air superiority over the Persian Gulf. To accomplish this, the strategy objectives were the following:

- Maintain extended air space surveillance over the Persian Gulf, Gulf of Oman, and Northern Arabian Sea.

- Collect, identify, intercept, and engage or escort all hostile or unknown aircraft entering the Persian Gulf battle force AAW surveillance area.

- Provide AAW protection for Coalition forces operating in the battle force surveillance area.

- Establish air control and deconfliction for Coalition air forces operating over the Persian Gulf.

(U) These strategies resulted in the Coalition naval forces essentially destroying the Iraqi Navy in three weeks. Control of the northern Gulf was secured and the region sea lines of communication were maintained with minimal Iraqi interference. Iraq's mine laying capability was reduced and the Coalition navy was able to establish operating areas further north allowing an increase in aircraft strike sorties against ashore targets and permitting amphibious operations. On 8 February, NAVCENT declared Coalition sea control of the northern Persian Gulf. Iraqi's navy losses were considerable as shown:

ANTISURFACE WARFARE RESULTS

- 143 Iraqi Naval Vessels Destroyed/Damaged
  - 11 Antiship Missile Boats Destroyed
  - 2 Antiship Missile Boats Disabled
  - 3 *Polnocny* Class Amphibious Ships Destroyed
  - 1 *Ibn Khaldun* Frigate Destroyed
  - 1 Bogomol PCF Patrol Boat Destroyed
  - 116 Small Patrol Boats and Auxiliaries Destroyed/Damaged
  - 9 Minelayers Destroyed

- All Iraqi Naval Bases/Ports Significantly Damaged
- All Northern Persian Gulf Oil Platforms Searched and Secured
- No Attacks by Iraqi Surface Vessels Against Coalition Forces

(U) DECEPTION OPERATIONS - PSYOPS

[redacted]

(U) These operations complemented the deception effort carried out by amphibious forces off Kuwait's coast. The Amphibious Task Force (ATF) mission was to deceive Iraq into expecting an amphibious assault against Kuwait. As the ground war approached, the ATF moved into the northern Gulf, conspicuously preparing for a amphibious assault. Overall, the deception was key in achieving, both tactical and operational surprise when Phase IV, the offensive ground campaign started.

OPERATION DESERT STORM: PHASE IV - OFFENSIVE GROUND CAMPAIGN 24 FEBRUARY 91 - 28 FEBRUARY 91

(U) Operation Desert Storm's final phase began early on 24 February 1991 after more than 180 days of maritime interception operations and 38 days of aerial bombardment. While Coalition air forces relentlessly pounded Iraqi defenses during the previous phases of Operation Desert Storm their ground forces completed combat preparations. For three weeks prior to the start of the ground war, logistic support operating 24 hours a day under an air campaign cover, helped move the equivalent of 17 division laterally hundreds of miles over a very limited road network. This repositioning and logistical buildup was completed on time and not detected by Iraqi forces. During this time, ground combat forces focused on battle preparations. Plans were refined, completed, issued, and rehearsed. Ground forces conducted reconnaissance missions to prepare the battlefield for the ground attack. Counter-reconnaissance was conducted to deny Iraq intelligence about Coalition ground force's disposition.

(U) Ground Operations Plan

(U) The ground operations plan was developed from an integrated and combined campaign plan. CINCCENT retained the function of land force commander over Army and Marine ground forces -- both component commanders played significant roles in developing and finalizing the CINC's concept of operations. CENTCOM's Plans and Policy Directorate and Combat Analysis Group had primary responsibility for developing and analyzing courses of action for the overall ground offensive plan. (This group was augmented by Army SAMs graduates -- School of Advanced Military Studies.) ARCENT and MARCENT had responsibility for developing and analyzing courses of action to implement the Theater Campaign Plan. As the overall land component commander, CINCCENT provided a focal point for the combined planning of the Coalition. United Kingdom, Egyptian, and French representatives augmented the existing United States-Saudi combined planning team.

(U) The planning process produced several operational imperatives that would remain as central tenets throughout the planning of the offensive. These tenets were considered essential to the success of the ground campaign. The three conclusions were:

- The air campaign would have to reduce Iraqi combat effectiveness in the KTO by 50%.

- Coalition ground forces should fight only those enemy units necessary to achieve Coalition objectives while by-passing other enemy forces.

- Battlefield tactical intelligence would be required in the hands of battleground commander rapidly so that fire power could be placed on target before the target could move sufficiently to require retargeting -- tactical intelligence targeting feedback was considered critical to success on the battleground.

GROUND OPERATIONS PLAN APPROVED

(U) On 14 November, CINCCENT briefed his concept for the operation to all his ground commanders down to division level. They were directed to have their forces ready by mid-January. The CINC's strategy and interest for the Offensive Ground Campaign was to:

> Maximize friendly strength against Iraqi weakness and terminate offensive operations with the RGFC destroyed and major US Forces controlling critical LOCs in the Kuwaiti Theater of Operations.

(U) On 19 and 20 December, the Secretary of Defense and Chairman, Joint Chief of Staff, were briefed on the plan and its phases of preparation and operation. It was the CINC's intention to psychologically and physically isolate the Iraqi forces in Kuwait. Operations would fix and block Iraq's first operational echelon reserves, secure Coalition flanks and LOC's, and destroy the RGFC divisions in the KTO. The plan was approved by the Secretary and subsequently by the President after being briefed by the Secretary and Chairman, Joint Chief of Staff. The actual start of the ground war, however, would require Presidential approval which came in February. By the end of January, the ground forces in theater were ready to conduct the type of offensive operation envisioned by CINCCENT.

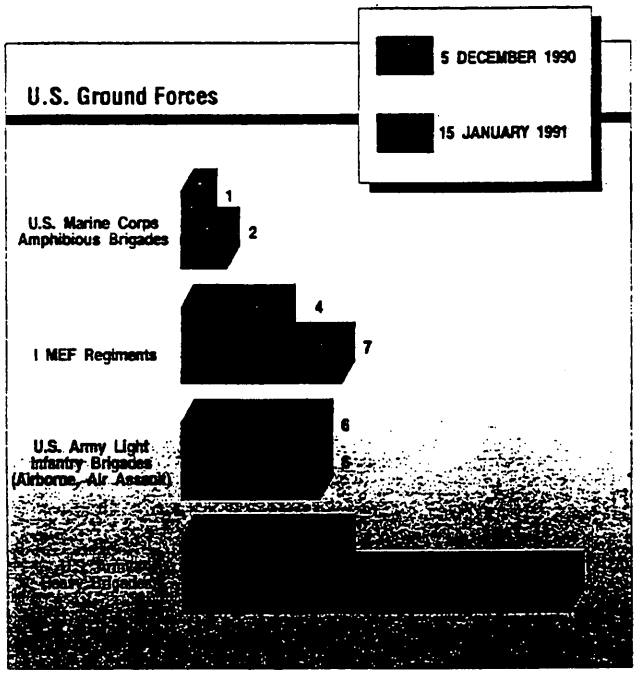

GROUND OPERATIONS FORCE STRUCTURE

F Task Organization

EF Command Element

1st Surveillance, Reconnaissance, and Intelligence Group
3d Civil Affairs Group
3d Naval Construction Regiment (USN)
24th Marines (USMCR) (Rear Area Security)

Marine Division

1st Marines (TF Papa Bear)
3d Marines (TF Taro)
4th Marines (TF Grizzly)
7th Marines (TF Ripper)
11th Marines (TF King)
1st Light Armored Infantry Battalion (TF Shepherd)
1st Battalion, 25th Marines (USMCR) (TF Warden)
TF Troy (Deception)
(1st and 3d Tank Battalions, 1st Combat Engineer Battalion, 1st Reconnaissance Battalion, and other combat support units were attached to the task forces)

Marine Division

6th Marines
8th Marines
Tiger Brigade, 2d Armored Division (USA)
10th Marines
2d Light Armored Infantry Battalion
2d Tank Battalion (M1A1)
8th Tank Battalion (USMCR) (M60A1)
1 Reconnaissance Battalion

Marine Aircraft Wing

Marine Aircraft Group-11
Marine Aircraft Group-13 (Forward)
Marine Aircraft Group-16
Marine Aircraft Group-26
Marine Air Control Group-38
Marine Wing Support Group-37

Force Service Support Group

General Support Group-1
General Support Group-2
Direct Support Command
Direct Support Group-1
Direct Support Group-2

Marine Expeditionary Brigade

5th Marines
Marine Aircraft Group 50 (Composite)
Brigade Service Support Group-5

MAJOR ARMY FORCES

Organization for Combat

ARCENT

11th ADA BDE

XVIII AIRBORNE CORPS

82d Airborne Division (-)
101st Airborne Division (AASLT)
24th Infantry Division (MECH)
197th Infantry Brigade (MECH)
3d ACR
12th AVN BDE
18th AVN BDE
XVIII Corps Artillery
18th FA BDE
212th FA BDE
196th FA BDE
6th Light Armored Division (FR) (TACON)
2d BDE, 82d Airborne Division (OPCON)

VII CORPS

1st Armored Division
3d BDE, 3d Infantry Division
3d Armored Division
1st Infantry Division (MECH)
2d Armored Division (FWD)
1st Cavalry Division (-)
2d ACR
11th AVN BDE
VII Corps Artillery
210th FA BDE
42d FA BDE
75th FA BDE
142d FA BDE
1st AR Division (UK) (TACON)

[redacted]

SOCCENT CONTROL

5th Special Forces Group
3d Special Forces Group (-)

[redacted]

MARCENT CONTROL

1st BDE, 2d Armored Division

Non-Affiliated Forces

European Forces

1st Armored Division (United Kingdom)

7th Armored Brigade Group
4th Armored Brigade

6th Light Armored Division (France)

1st Foreign Legion Cavalry Regt
1st Helicopter Regt
1st Spahihf Regt
2nd Foreign Legion Infantry Regt
3rd Helicopter Regt (Reinforced)
3rd Marine Infantry Regiment
4th Dragoon Regt

Kuwaiti Forces

Al-Haq Brigade, Kuwaiti Forces
Khulud Brigade, Kuwaiti Forces
Kuwaiti Commando Battalion

Arab-Islamic Forces:

Joint Forces Command - East

Force Abu Bakr

2nd SANG Brigade

Force Othman

8th Mech Brigade (RSLF)
Kuwait Al-Fatah Brigade
Oman Motorized Infantry Battalion
Bahrain Infantry Company

Task Force Omar

10th Mech Brigade (RSLF)
UAE Motorized Infantry Battalion

Task Force Tariq

Marine Battalion Task Force (RS Marines
Infantry Battalion (Senegal)
6th Mech Infantry Regiment (Moroccan

JFC-E Troops

Qatar Mech Infantry Battalion
1st East Bengal INF BN
Combat Aviation Battalion (Kuwait/UAE)
14th FA BN (Towed, 155) (RSLF)
18th FA BN (MLRS) (RSLF)
Engineer Force 5 Saif Allah (RSLF)

Arab-Islamic Forces:

Joint Forces Command - North

Egyptian Corps

3rd Mech Infantry Division
4th Armored Division
Ranger Regiment

Syrian Division

9th Armored Division
Special Forces Regiment

Force Muthannah

20th Mech Brigade, (RSLF)
35th Mech Infantry BDE, Kuwait

Force SAAD

4th Armored Brigade, (RSLF)
15th Infantry Brigade, Kuwaiti

JFC-N Troops

Niger INF BN
1st Aviation BN (RSLF)
15th FA BN (RSLF)

COMMON WARFIGHTING DOCTRINES

THE ATTACK

(U) At 0400, 24 February 1991, the ground attack started. Coalition forces were positioned in four major formations along a 300 mile line from the Persian Gulf into the western desert. CENTCOM initiated combined arms attack against Iraqi forces at three points:

Far West - The forces involved included the French 6th Light Armored Division (with the 2nd Brigade, 82nd Airborne Division under its operational control) and the 101st Airborne Division (Air Assault). The force conducted a massive air and ground envelopment to secure the Coalition western flank and establish forward support bases deep in Iraq.

Center Point - The force involved was the 1st Cavalry Division. This force was located in the center of the Coalition line along the Wadi Al-Batin (a dry ravine that separates Kuwait from Iraq). This force was the theater reserve, and was used to feint an attack north toward a heavy Iraqi concentration.

East - The forces involved were the 1 MEF and Joint Forces Coalition-East (JFC-E). These forces attacked north into Kuwait.

(U) The main attack was designed to avoid most fixed defense, drive deep into Iraq, envelop Iraqi forces from the west and attack Iraq's strategic reserves - the Republican Guard armored and mechanized infantry division plus several other heavy divisions. The far west sweep, sometimes called the "Hail Mary" plan (also known as the left hook) emphasized the key tenets of the Air/Land Battle doctrine. Accurate intelligence, air supremacy, the reduction of enemy combat power by air operations and technological advantages (e.g., SLGRs-light weight Global Positioning System Receiver) made it possible to cross the desert undetected and effectively apply overwhelming ground combat power from a direction and in a way the Iraqis did not expect.

G - 1 Dispositions 23 February

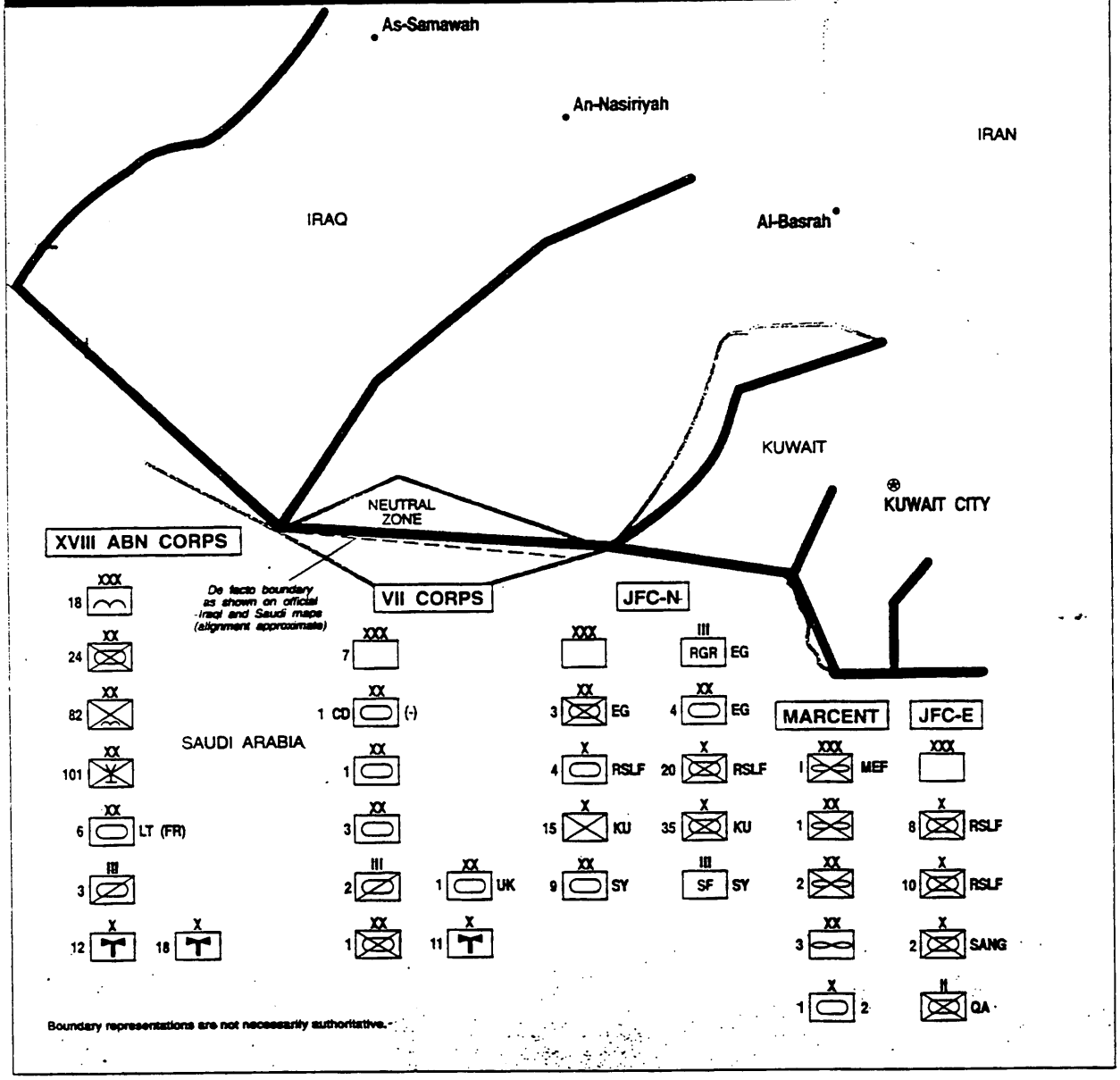

DESERT STORM OPERATIONS: EXAMPLES

(U) The "Hail Mary" plan succeeded in large part because of Phases I, II, and III which masked the operation so well that Iraq was completely fooled. From 17 January to 24 February, while the Coalition waged the air supremacy campaign and prepared the battlefield, III Corps, XVIII Airborne Corps, and other Coalition elements moved more than 270,000 troops and supplies into position for attack. XVIII Airborne Corps maneuvered west 260 miles and VII Corps moved west 150 miles in the same tactical formations they would use when the ground attack started. It was one of the largest and longest movements of combat forces in history, exceeding the total number of personnel and equipment that supported General George S. Patton in his attack against the German flank at the Battle of the Bulge in World War II.

(U) VII Corps conducted a coordinated main attack against the three mechanized Republican Guard Divisions -- Tawakalina, Al-Madinah, and Hammurabi. These attacks were closely synchronized combined arms and joint operations. Close Air Support was shifted deeper to attack the next set of targets. Artillery barrages and AH-64 battalions were called in to fix the Iraqis and prevent them from maneuvering effectively against the approaching US forces. When the VII Corps maneuver elements struck, it was one decisive blow after another.

(U) In 90 hours of continuous movement and combat, VII Corps achieved devastating results against some of the best units of the Iraqi army. With only light casualties and combat vehicle losses, the VII Corps captured 22,000 enemy soldiers. The VII Corps destroyed the following:

- 12+ divisions
- 1,300 tanks
- 1,200 fighting vehicles and APCs
- 285 artillery pieces
- 100 air defense system

(U) The I MEF launched its attack against Iraqi forces in and around Kuwait City. It advanced with the 1st MARDIV turning toward Kuwait International Airport. The Tiger Brigade headed toward Al-Mutl's Ridge, terrain that dominated the roads leading from Kuwait City and key to cutting off an Iraqi retreat. The 2nd MARDIV began its attack on Iraqi forces inside Kuwait.

(U) The 1st MARDIV element encountered stiff resistance against a desperate Iraq's armored defense centered on Kuwait International Airport. The division, supported by 16-inch naval gunfire and close air support, seized the airport on 27 February. That was the final Iraqi stand in the KTO and it cost them 250 destroyed tanks and 70 armored vehicles. Later that day, the I MEF secured its assigned objectives and awaited the arrival of the JFC-E and Joint Forces Coalition - North

(JFC-N) forces for the liberation of Kuwait City.

(U) In a classic example of joint operation, the Tiger Brigade, with 3rd Battalion, 67th Armor in the lead supported by USAF and USMC close air support, secured the high ground northwest of Al-Jahra and destroyed the remaining Iraqi resistance and cut off of any retreat. Adding its firepower to the continuous air strike, the destruction of Iraqi forces and equipment along the multi-lane highway brought the road the name "Highway of Death." Elements of the 2nd MARDIV reached Al-lahra, overcoming stiff resistance south of the city. The 1st Battalion, 6th Marine was the first Marine unit to reach Kuwait City.

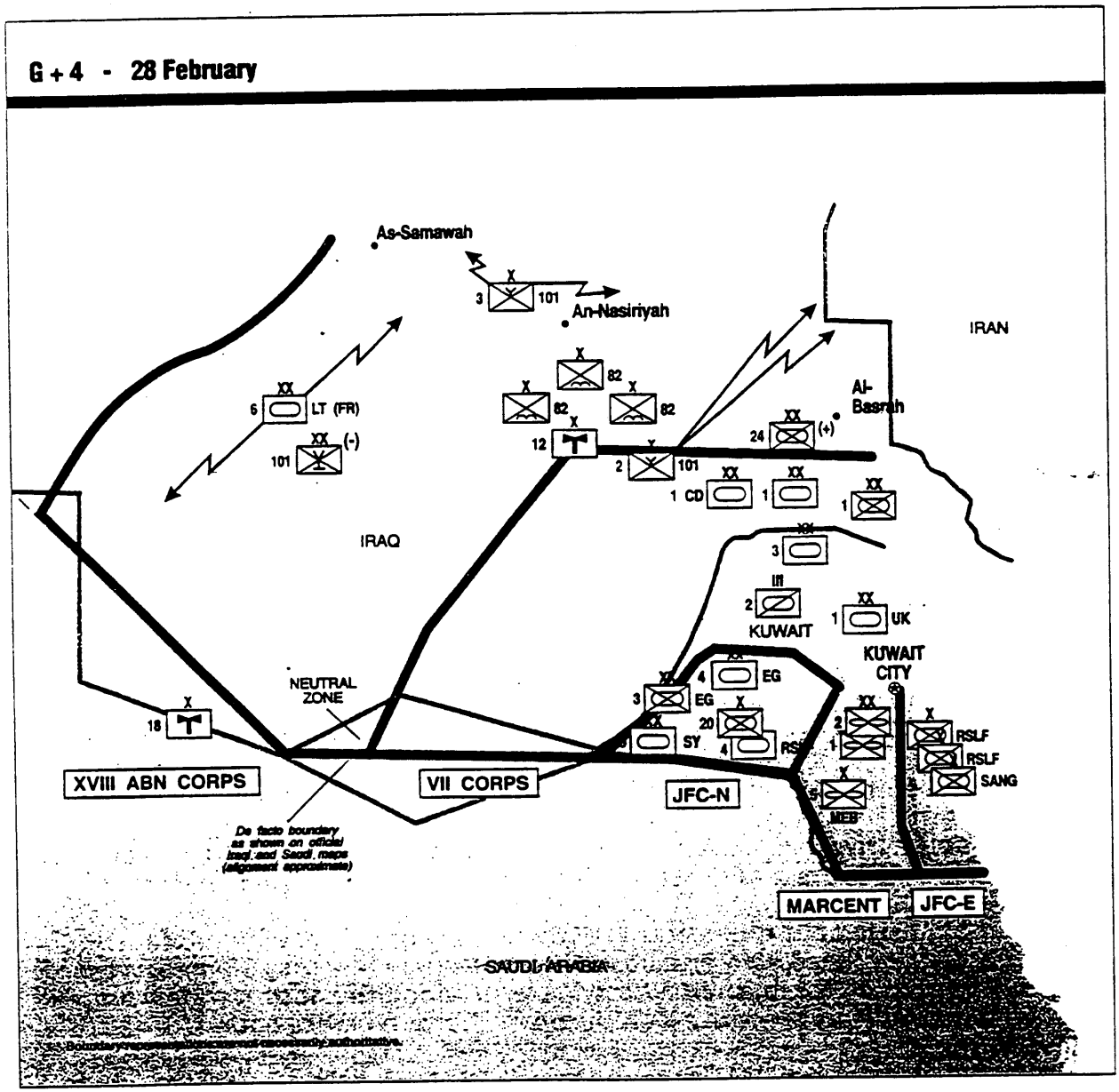

100 HOURS

(U) At about 0800, on 28 February 1991, offensive operations were halted. JFC-E and JFC-N had linked up and entered Kuwait City. VII Corps had armored division elements in western Kuwait. The XVIII Airborne Corps had completed its advance into western Iraq, cutting off Iraqi retreat and destroying RGFC elements. Its advance ended, as did the 24th Infantry Division (Mechanized), along a designated line 30 miles west of Al Basrah. Kuwait City was liberated after 100 hours of ground combat.

SUMMARY OF THE OFFENSIVE GROUND CAMPAIGN:

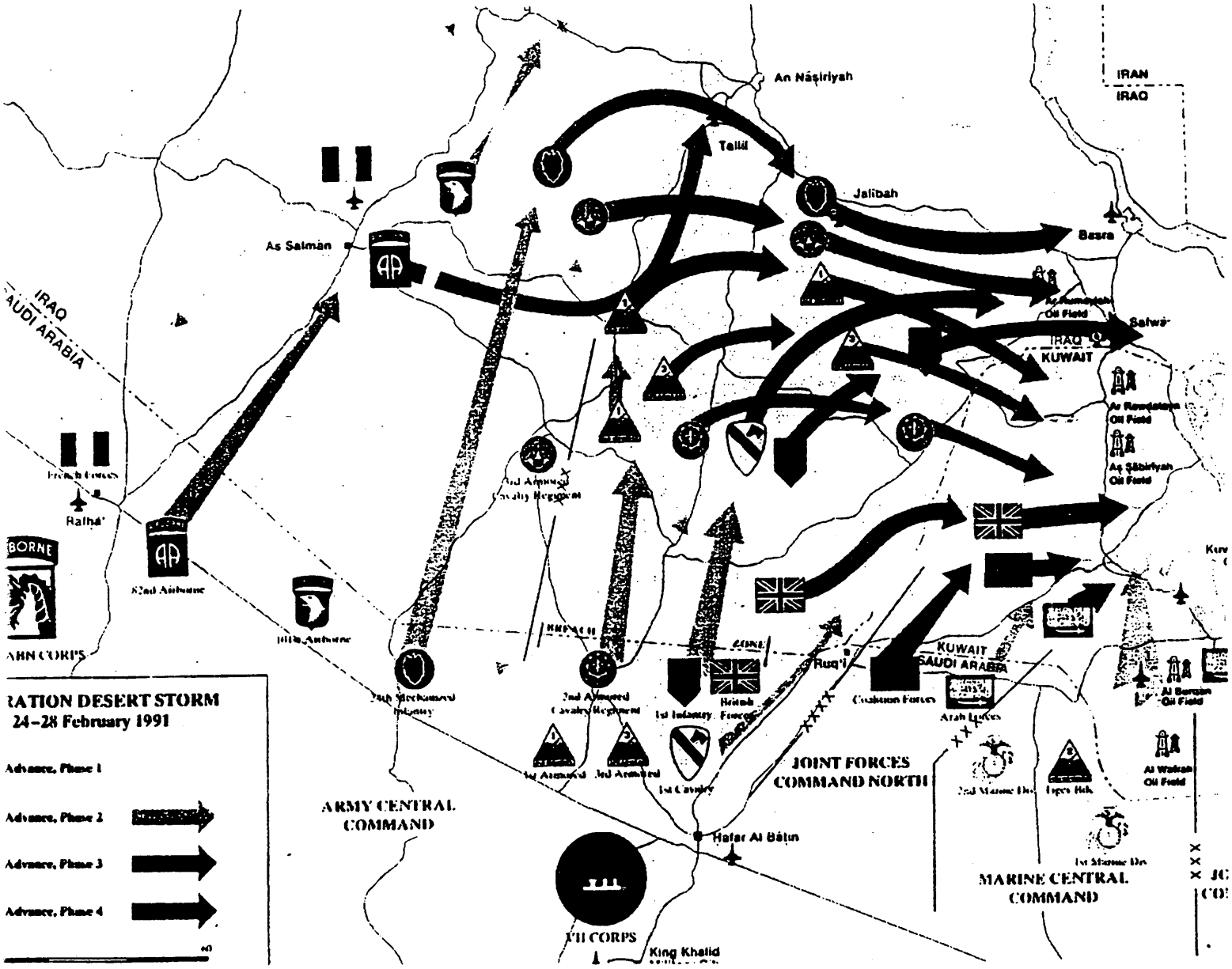

SUMMARY OF THE GROUND CAMPAIGN

(U) When the ground offensive ended, the Coalition forces had defeated the fourth largest military in the world. Coalition ground forces, with tremendous support from air and naval forces, stood on the bank of the Euphrates River and patrolled a liberated Kuwait City. Ground commanders never lost sight of their objectives in implementing a very good plan.

(U) The ground campaign's results were impressive. The 100 hour campaign achieved all of CINCENT's objectives. At the end of the fighting, US and Coalition forces achieved these results:

- Controlled critical lines of communication in the KTO.
- Ejected Iraqi forces from Kuwait.
- Secured Kuwait International Airport and crossroad west of Kuwait City.
- Flanked, cut off, and destroyed Republican Guard forces.
- Liberated Kuwait City.

(U) Analysis and correlation of data from the ground forces campaign was completed on 18 March 1991. The final number of enemy vehicles estimated by CENTCOM as destroyed or captured by Coalition forces during the entire Operation Desert Storm operation are as shown:

- 3847 tanks
- 1450 armored personnel carrier
- 2917 artillery pieces

(U) Final CENTCOM estimates were that only five to seven of the Iraqi 43 combat division remained capable of offensive operations. An estimated 86,000 prisoners were captured -- 64,000 by US forces. The combined Coalition forces had won a very swift and complete victory.

CONCLUSIONS

(U) The US and its Coalition partners forged an effective fighting force in defeating Iraq and liberating Kuwait City while sustaining light casualties. It was a victory achieved through detailed planning and bold aggressive execution. The first three phases of the war plan conducting the strategic air campaign, gaining air superiority in the KTO, and preparing the battlefield set the stage for the final ground offensive phase and the decisive victory.

(U) Modern weapon systems and technology in the hands of well-trained and well-led forces provided a critical multiplying force advantage in modern combat as demonstrated by Operation Desert Storm. The combination of austere terrain and desert weather, coupled with extended periods of reduced visibility, let US forces exploit the advantage of long-range weapons and all-weather day-night systems. In many instances, this provided the crucial edge for success and contributed to the low casualty rate.

(U) The systematic evolution of doctrine before Operation Desert Storm served the US and its Coalition partners well. Service doctrines that stressed maneuver warfare fundamentals, coupled with joint doctrine for air, land, and maritime operations under a unified commander were a significant advantage. US doctrine, strategy, and tactics stresses maneuver warfare based on continuous operations, flexibility, agility, initiatives, and synchronization. The successful execution of these principles proved devastating to Iraqi forces during the Phase IV ground offensive campaign. Operation Desert Storm was a clear demonstration of overwhelming effectiveness of joint and combined operations synchronized by sound doctrine and experienced leaders.